SGLS398A – APRIL 2002 – REVISED APRIL 2008

3.3-V CAN TRANSCEIVERS

FEATURES

- Qualified for Automotive Applications
- ESD Protection Exceeds 2000 V Per MIL-STD-883, Method 3015; Exceeds 200 V Using Machine Model (C = 200 pF, R = 0)
- Operates With a 3.3-V Supply
- Low Power Replacement for the PCA82C250 Footprint
- Bus/Pin ESD Protection Exceeds 15-kV HBM
- Controlled Driver Output Transition Times for Improved Signal Quality on the SN65HVD230Q and SN65HVD231Q
- Unpowered Node Does Not Disturb the Bus
- Compatible With the Requirements of the ISO 11898 Standard
- Low-Current SN65HVD230Q Standby Mode 370 μA Typical
- Low-Current SN65HVD231Q Sleep Mode 0.1 μA Typical
- Designed for Signaling Rates‡ Up To 1 Megabit/Second (Mbps)
- Thermal Shutdown Protection
- Open-Circuit Fail-Safe Design

SN65HVD230QD
SN65HVD231QD
(TOP VIEW)

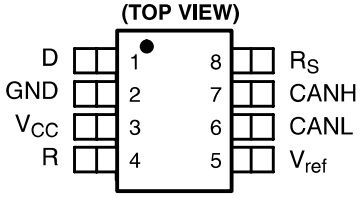

SN65HVD232QD
(TOP VIEW)

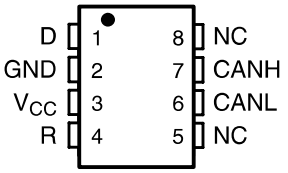

NC – No internal connection

logic diagram (positive logic)

SN65HVD230Q, SN65HVD231Q
Logic Diagram (Positive Logic)

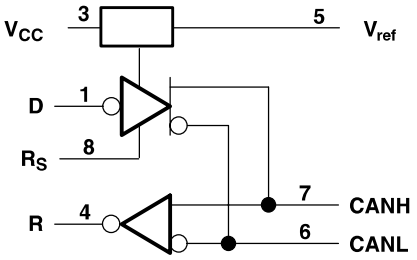

SN65HVD232Q
Logic Diagram (Positive Logic)

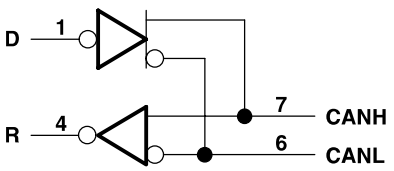

Please be aware that an important notice concerning availability, standard warranty, and use in critical applications of Texas Instruments semiconductor products and disclaimers thereto appears at the end of this data sheet.

‡ The signaling rate of a line is the number of voltage transitions that are made per second expressed in the units bps (bits per second).

PRODUCTION DATA information is current as of publication date. Products conform to specifications per the terms of Texas Instruments standard warranty. Production processing does not necessarily include testing of all parameters.

Copyright © 2008, Texas Instruments Incorporated

DESCRIPTION

The SN65HVD230Q, SN65HVD231Q, and SN65HVD232Q controller area network (CAN) transceivers are designed for use with the Texas Instruments TMS320Lx240x 3.3-V DSPs with CAN controllers, or with equivalent devices. They are intended for use in applications employing the CAN serial communication physical layer in accordance with the ISO 11898 standard. Each CAN transceiver is designed to provide differential transmit capability to the bus and differential receive capability to a CAN controller at speeds up to 1 Mbps.

Designed for operation in especially-harsh environments, these devices feature cross-wire protection, loss-of-ground and overvoltage protection, overtemperature protection, as well as wide common-mode range.

The transceiver interfaces the single-ended CAN controller with the differential CAN bus found in industrial, building automation, and automotive applications. It operates over a –2-V to 7-V common-mode range on the bus, and it can withstand common-mode transients of ±25 V.

On the SN65HVD230Q and SN65HVD231Q, R_S (pin 8) provides three different modes of operation: high-speed, slope control, and low-power modes. The high-speed mode of operation is selected by connecting pin 8 to ground, allowing the transmitter output transistors to switch on and off as fast as possible with no limitation on the rise and fall slopes. The rise and fall slopes can be adjusted by connecting a resistor to ground at pin 8, since the slope is proportional to the pin's output current. This slope control is implemented with external resistor values of 10 kΩ, to achieve a 15-V/µs slew rate, to 100 kΩ, to achieve a 2-V/µs slew rate.

The circuit of the SN65HVD230Q enters a low-current standby mode during which the driver is switched off and the receiver remains active if a high logic level is applied to R_S (pin 8). The DSP controller reverses this low-current standby mode when a dominant state (bus differential voltage > 900 mV typical) occurs on the bus.

The unique difference between the SN65HVD230Q and the SN65HVD231Q is that both the driver and the receiver are switched off in the SN65HVD231Q when a high logic level is applied to R_S (pin 8) and remain in this sleep mode until the circuit is reactivated by a low logic level on R_S.

The V_{ref} (pin 5 on the SN65HVD230Q and SN65HVD231Q) is available as a $V_{CC}/2$ voltage reference.

The SN65HVD232Q is a basic CAN transceiver with no added options; pins 5 and 8 are NC, no connection.

AVAILABLE OPTIONS†‡

FUNCTION NUMBER	LOW POWER MODE	INTEGRATED SLOPE CONTROL	Vref PIN
'230	370-µA standby mode	Yes	Yes
'231	10-µA sleep mode	Yes	Yes
'232	No standby or sleep mode	No	No

PART NUMBER	Q100	T_A	MARKED AS:
SN65HVD230QD	No	–40°C to 125°C	HV230Q
SN65HVD231QD	No		HV231Q
SN65HVD232QD	No		HV232Q
SN65HVD230QDQ1	Yes	–40°C to 125°C	230Q1
SN65HVD231QDQ1	Yes		231Q1
SN65HVD232QDQ1	Yes		232Q1

† For the most current package and ordering information, see the Package Option Addendum at the end of this document, or see the TI web site at http://www.ti.com.

‡ Package drawings, thermal data, and symbolization are available at http://www.ti.com/packaging.

The D package is available taped and reeled. Add the suffix R to device type (e.g., SN65HVD230QDRQ1).

Function Tables

DRIVER (SN65HVD230Q, SN65HVD231Q)

INPUT D	R_S	OUTPUTS		BUS STATE
		CANH	CANL	
L	$V_{(Rs)} < 1.2$ V	H	L	Dominant
H		Z	Z	Recessive
Open	X	Z	Z	Recessive
X	$V_{(Rs)} > 0.75\ V_{CC}$	Z	Z	Recessive

H = high level; L = low level; X = irrelevant; ? = indeterminate

DRIVER (SN65HVD232Q)

INPUT D	OUTPUTS		BUS STATE
	CANH	CANL	
L	H	L	Dominant
H	Z	Z	Recessive
Open	Z	Z	Recessive

H = high level; L = low level

RECEIVER (SN65HVD230Q)

DIFFERENTIAL INPUTS	R_S	OUTPUT R
$V_{ID} \geq 0.9$ V	X	L
$0.5\ V < V_{ID} < 0.9$ V	X	?
$V_{ID} \leq 0.5$ V	X	H
Open	X	H

H = high level; L = low level; X = irrelevant; ? = indeterminate

RECEIVER (SN65HVD231Q)

DIFFERENTIAL INPUTS	R_S	OUTPUT R
$V_{ID} \geq 0.9$ V	$V_{(Rs)} < 1.2$ V	L
$0.5\ V < V_{ID} < 0.9$ V		?
$V_{ID} \leq 0.5$ V		H
X	$V_{(Rs)} > 0.75\ V_{CC}$	H
X	$1.2\ V < V_{(Rs)} < 0.75\ V_{CC}$	?
Open	X	H

H = high level; L = low level; X = irrelevant; ? = indeterminate

RECEIVER (SN65HVD232Q)

DIFFERENTIAL INPUTS	OUTPUT R
$V_{ID} \geq 0.9$ V	L
$0.5\ V < V_{ID} < 0.9$ V	?
$V_{ID} \leq 0.5$ V	H
Open	H

H = high level; L = low level; X = irrelevant; ? = indeterminate

Function Tables (Continued)

TRANSCEIVER MODES (SN65HVD230Q, SN65HVD231Q)

$V_{(Rs)}$	OPERATING MODE
$V_{(RS)} > 0.75\ V_{CC}$	Standby
10 kΩ to 100 kΩ to ground	Slope control
$V_{(RS)} < 1$ V	High speed (no slope control)

Terminal Functions

SN65HVD230Q, SN65HVD231Q		
TERMINAL		DESCRIPTION
NAME	NO.	
CANL	6	Low bus output
CANH	7	High bus output
D	1	Driver input
GND	2	Ground
R	4	Receiver output
R_S	8	Standby/slope control
V_{CC}	3	Supply voltage
V_{ref}	5	Reference output

SN65HVD232Q		
TERMINAL		DESCRIPTION
NAME	NO.	
CANL	6	Low bus output
CANH	7	High bus output
D	1	Driver input
GND	2	Ground
NC	5, 8	No connection
R	4	Receiver output
V_{CC}	3	Supply voltage

equivalent input and output schematic diagrams

CANH and CANL Inputs

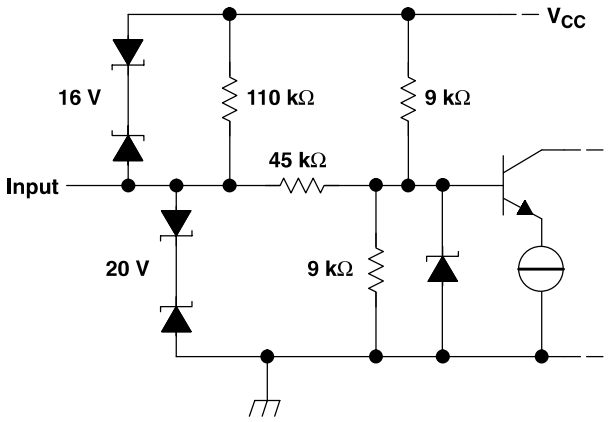

D Input

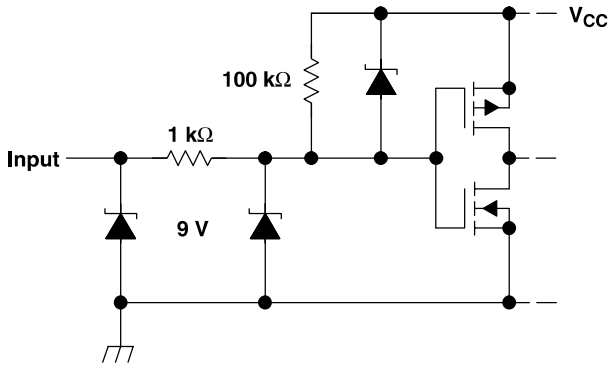

CANH and CANL Outputs

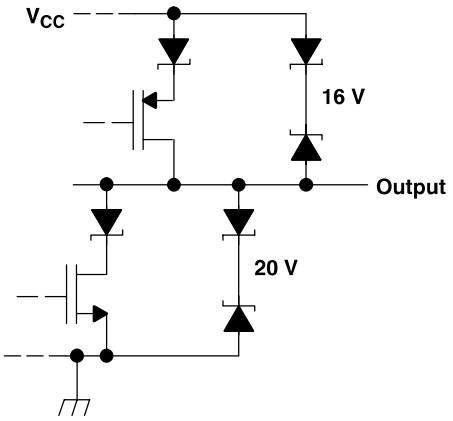

R Output

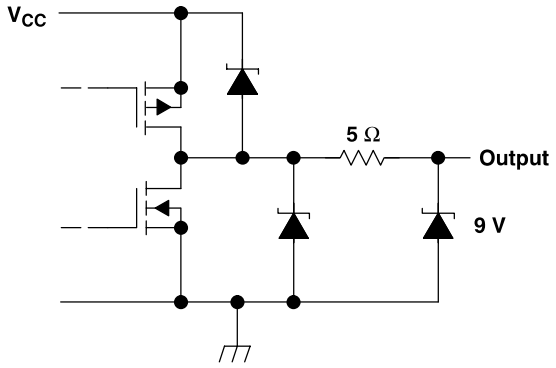

absolute maximum ratings over operating free-air temperature (see Note 1) (unless otherwise noted)†

Supply voltage range, V_{CC} . . . . . −0.3 V to 6 V
Voltage range at any bus terminal (CANH or CANL) . . . . . −7 V to 16 V
Voltage input range, transient pulse, CANH and CANL, through 100 Ω (see Figure 7) . . . . . −25 V to 25 V
Input voltage range, V_I (D or R) . . . . . −0.5 V to V_{CC} + 0.5 V
Electrostatic discharge: Human body model (see Note 2) CANH, CANL and GND . . . . . 15 kV
All pins . . . . . 2.5 kV
Charged-device model (see Note 3) All pins . . . . . 4 kV
Continuous total power dissipation . . . . . See Dissipation Rating table
Storage temperature range, T_{stg} . . . . . −65°C to 150°C
Lead temperature 1,6 mm (1/16 inch) from case for 10 seconds . . . . . 260°C

† Stresses beyond those listed under "absolute maximum ratings" may cause permanent damage to the device. These are stress ratings only, and functional operation of the device at these or any other conditions beyond those indicated under "recommended operating conditions" is not implied. Exposure to absolute-maximum-rated conditions for extended periods may affect device reliability.

NOTES: 1. All voltage values, except differential I/O bus voltages, are with respect to network ground terminal.
2. Tested in accordance with JEDEC Standard 22, Test Method A114-A.
3. Tested in accordance with JEDEC Standard 22, Test Method C101.

DISSIPATION RATING TABLE

PACKAGE	$T_A \leq 25°C$ POWER RATING	DERATING FACTOR‡ ABOVE $T_A = 25°C$	$T_A = 70°C$ POWER RATING	$T_A = 85°C$ POWER RATING	$T_A = 125°C$ POWER RATING
D	725 mW	5.8 mW/°C	464 mW	377 mW	145 mW

‡ This is the inverse of the junction-to-ambient thermal resistance when board-mounted and with no air flow.

recommended operating conditions

PARAMETER		MIN	NOM	MAX	UNIT
Supply voltage, V_{CC}		3		3.6	V
Voltage at any bus terminal (common mode) V_{IC}		−2§		7	V
Voltage at any bus terminal (separately) V_I		−2.5		7.5	V
High-level input voltage, V_{IH}	D, R	2			V
Low-level input voltage, V_{IL}	D, R			0.8	V
Differential input voltage, V_{ID} (see Figure 5)		−6		6	V
$V_{(RS)}$		0		V_{CC}	V
$V_{(RS)}$ for standby or sleep		0.75 V_{CC}		V_{CC}	V
Rs wave-shaping resistance		0		100	kΩ
High-level output current, I_{OH}	Driver	−40			mA
	Receiver	−8			
Low-level output current, I_{OL}	Driver			48	mA
	Receiver			8	
Operating free-air temperature, T_A		−40		125	°C

§ The algebraic convention, in which the least positive (most negative) limit is designated as minimum is used in this data sheet.

driver electrical characteristics over recommended operating conditions (unless otherwise noted)

PARAMETER			TEST CONDITIONS		MIN	TYP†	MAX	UNIT
V_{OH}	Bus output voltage	Dominant	V_I = 0 V, See Figure 1 and Figure 3	CANH	2.45		V_{CC}	V
				CANL	0.5		1.25	
V_{OL}		Recessive	V_I = 3 V, See Figure 1 and Figure 3	CANH		2.3		
				CANL		2.3		
$V_{OD(D)}$	Differential output voltage	Dominant	V_I = 0 V, See Figure 1		1.5	2	3	V
			V_I = 0 V, See Figure 2		1.2	2	3	
$V_{OD(R)}$		Recessive	V_I = 3 V, See Figure 1		−120	0	12	mV
			V_I = 3 V, No load		−0.5	−0.2	0.05	V
I_{IH}	High-level input current		V_I = 2 V		−30			µA
I_{IL}	Low-level input current		V_I = 0.8 V		−30			µA
I_{OS}	Short-circuit output current		V_{CANH} = −2 V		−250		250	mA
			V_{CANL} = 7 V		−250		250	
C_o	Output capacitance		See receiver					
I_{CC}	Supply current	Standby / SN65HVD230Q	$V_{(RS)} = V_{CC}$			370	600	µA
		Sleep / SN65HVD231Q				0.1		
		All devices / Dominant	V_I = 0 V, No load	Dominant		10	17	mA
		All devices / Recessive	$V_I = V_{CC}$, No load	Recessive		10	17	

† All typical values are at 25°C and with a 3.3-V supply.

driver switching characteristics at T_A = 25°C (unless otherwise noted)

SN65HVD230Q and SN65HVD231Q

PARAMETER		TEST CONDITIONS		MIN	TYP	MAX	UNIT
t_{PLH}	Propagation delay time, low-to-high-level output	$V_{(RS)}$ = 0 V	C_L = 50 pF, See Figure 4		35	85	ns
		R_S with 10 kΩ to ground			70	125	
		R_S with 100 kΩ to ground			500	870	
t_{PHL}	Propagation delay time, high-to-low-level output	$V_{(RS)}$ = 0 V			70	120	ns
		R_S with 10 kΩ to ground			130	180	
		R_S with 100 kΩ to ground			870	1200	
$t_{sk(p)}$	Pulse skew ($\lvert t_{P(HL)} - t_{P(LH)} \rvert$)	$V_{(RS)}$ = 0 V			35		ns
		R_S with 10 kΩ to ground			60		
		R_S with 100 kΩ to ground			370		
t_r	Differential output signal rise time	$V_{(RS)}$ = 0 V		25	50	100	ns
t_f	Differential output signal fall time			40	55	80	ns
t_r	Differential output signal rise time	R_S with 10 kΩ to ground		80	120	160	ns
t_f	Differential output signal fall time			80	125	150	ns
t_r	Differential output signal rise time	R_S with 100 kΩ to ground		600	800	1200	ns
t_f	Differential output signal fall time			600	825	1000	ns

driver switching characteristics at T_A = 25°C (unless otherwise noted)

SN65HVD232Q

PARAMETER		TEST CONDITIONS	MIN	TYP	MAX	UNIT
t_{PLH}	Propagation delay time, low-to-high-level output	C_L = 50 pF, See Figure 4		35	85	ns
t_{PHL}	Propagation delay time, high-to-low-level output			70	120	ns
$t_{sk(p)}$	Pulse skew ($\|t_{P(HL)} – t_{P(LH)}\|$)			35		ns
t_r	Differential output signal rise time		25	50	100	ns
t_f	Differential output signal fall time		40	55	80	ns

receiver electrical characteristics over recommended operating conditions (unless otherwise noted)

PARAMETER		TEST CONDITIONS		MIN	TYP†	MAX	UNIT
V_{IT+}	Positive-going input threshold voltage	See Table 1			750	900	mV
$V_{IT–}$	Negative-going input threshold voltage			500	650		mV
V_{hys}	Hysteresis voltage ($V_{IT+} – V_{IT–}$)				100		
V_{OH}	High-level output voltage	–6 V ≤ V_{ID} ≤ 500 mV, I_O = –8 mA, See Figure 5		2.4			V
V_{OL}	Low-level output voltage	900 mV ≤ V_{ID} ≤ 6 V, I_O = 8 mA, See Figure 5				0.4	
I_I	Bus input current	V_{IH} = 7 V	Other input at 0 V, D = 3 V	100		250	µA
		V_{IH} = 7 V, V_{CC} = 0 V		100		350	
		V_{IH} = –2 V		–200		–30	µA
		V_{IH} = –2 V, V_{CC} = 0 V		–100		–20	
C_i	CANH, CANL input capacitance	Pin-to-ground, V_I = 0.4 sin(4E6πt) + 0.5 V	$V_{(D)}$ = 3 V,		32		pF
C_{diff}	Differential input capacitance	Pin-to-pin, V_I = 0.4 sin(4E6πt) + 0.5 V	$V_{(D)}$ = 3 V,		16		pF
R_{diff}	Differential input resistance	Pin-to-pin, $V_{(D)}$ = 3 V		40	70	100	kΩ
R_T	CANH, CANL input resistance			20	35	50	kΩ
I_{CC}	Supply current	See driver					

† All typical values are at 25°C and with a 3.3-V supply.

receiver switching characteristics at T_A = 25°C (unless otherwise noted)

PARAMETER			TEST CONDITIONS	MIN	TYP	MAX	UNIT
t_{PLH}	Propagation delay time, low-to-high-level output		See Figure 6		35	50	ns
t_{PHL}	Propagation delay time, high-to-low-level output				35	50	ns
$t_{sk(p)}$	Pulse skew ($\|t_{P(HL)} – t_{P(LH)}\|$)					10	ns
t_r	Output signal rise time		See Figure 6		1.5		ns
t_f	Output signal fall time				1.5		ns
$t_{(loop)}$	Total loop delay, driver input to receiver output	$V_{(RS)}$ = 0 V			70	135	ns
$t_{(loop)}$	Total loop delay, driver input to receiver output	R_S with 10 kΩ to ground			105	175	
$t_{(loop)}$	Total loop delay, driver input to receiver output	R_S with 100 kΩ to ground			535	920	

device control-pin characteristics over recommended operating conditions (unless otherwise noted)

PARAMETER		TEST CONDITIONS	MIN	TYP†	MAX	UNIT
$t_{(WAKE)}$	SN65HVD230Q wake-up time from standby mode with R_S	See Figure 8		0.55	1.5	µS
	SN65HVD231Q wake-up time from sleep mode with R_S				3	µS
V_{ref}	Reference output voltage	$-5\ \mu A < I_{(Vref)} < 5\ \mu A$	0.45 V_{CC}		0.55 V_{CC}	V
		$-50\ \mu A < I_{(Vref)} < 50\ \mu A$	0.4 V_{CC}		0.6 V_{CC}	
$I_{(RS)}$	Input current for high-speed	$V_{(RS)} < 1$ V	−450		0	µA

† All typical values are at 25°C and with a 3.3 V supply.

PARAMETER MEASUREMENT INFORMATION

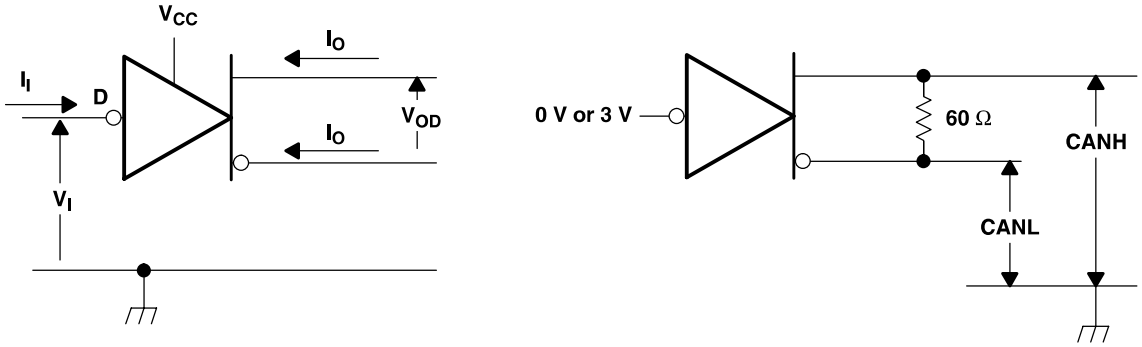

Figure 1. Driver Voltage and Current Definitions

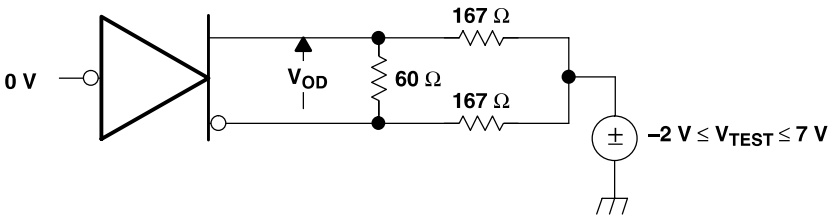

Figure 2. Driver V_{OD}

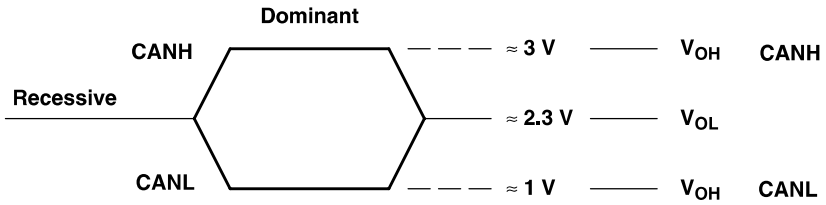

Figure 3. Driver Output Voltage Definitions

PARAMETER MEASUREMENT INFORMATION

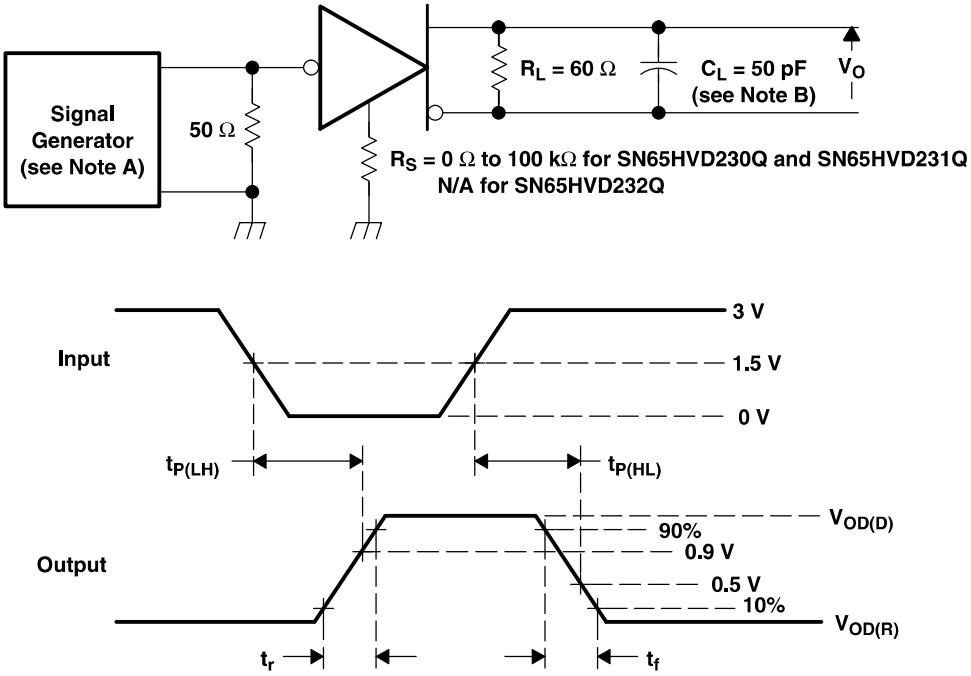

NOTES: A. The input pulse is supplied by a generator having the following characteristics: PRR ≤ 500 kHz, 50% duty cycle, t_r ≤ 6 ns, t_f ≤ 6 ns, Z_O = 50 Ω.
B. C_L includes probe and jig capacitance.

Figure 4. Driver Test Circuit and Voltage Waveforms

$$V_{IC} = \frac{V_{CANH} + V_{CANL}}{2}$$

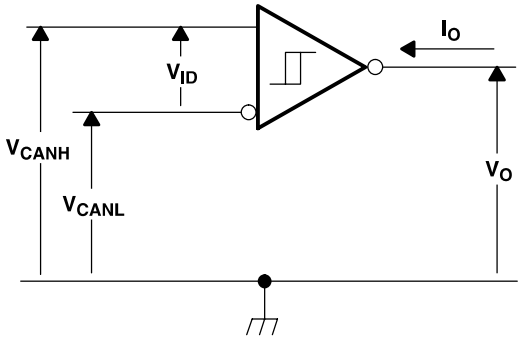

Figure 5. Receiver Voltage and Current Definitions

PARAMETER MEASUREMENT INFORMATION

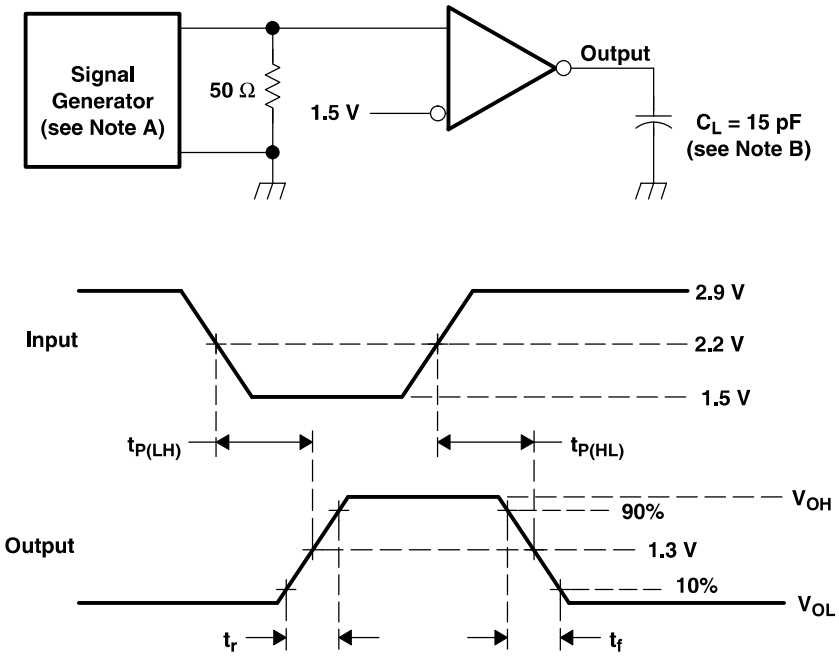

NOTES: A. The input pulse is supplied by a generator having the following characteristics: PRR ≤ 500 kHz, 50% duty cycle, t_r ≤ 6 ns, t_f ≤ 6 ns, Zo = 50 Ω.
B. C_L includes probe and jig capacitance.

Figure 6. Receiver Test Circuit and Voltage Waveforms

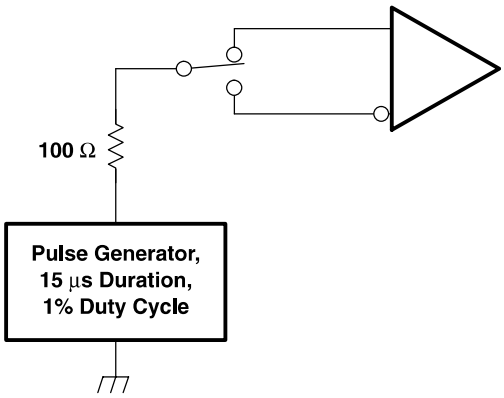

Figure 7. Overvoltage Protection

PARAMETER MEASUREMENT INFORMATION

Table 1. Receiver Characteristics Over Common Mode With V(RS) at 1.2 V

V_{IC}	V_{ID}	V_{CANH}	V_{CANL}	R OUTPUT	
–2 V	900 mV	–1.55 V	–2.45 V	L	V_{OL}
7 V	900 mV	8.45 V	6.55 V	L	
1 V	6 V	4 V	–2 V	L	
4 V	6 V	7 V	1 V	L	
–2 V	500 mV	–1.75 V	–2.25 V	H	V_{OH}
7 V	500 mV	7.25 V	6.75 V	H	
1 V	–6 V	–2 V	4 V	H	
4 V	–6 V	1 V	7 V	H	
X	X	Open	Open	H	

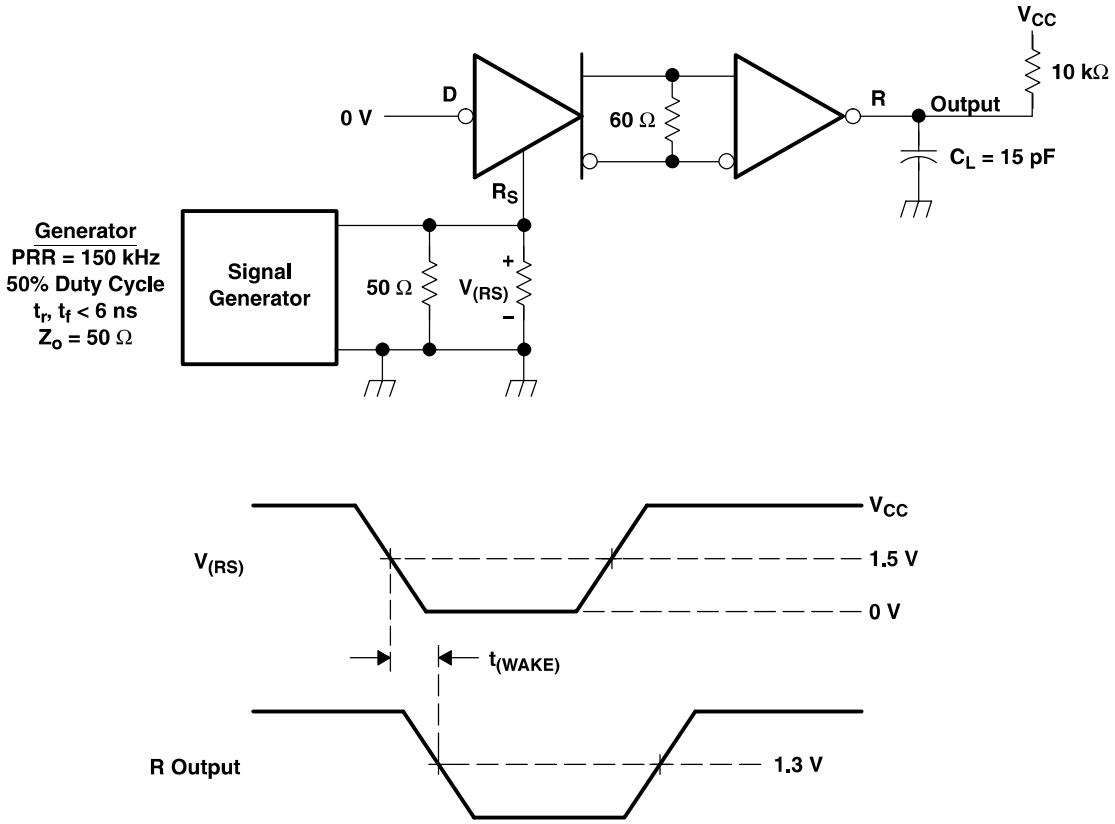

Figure 8. $t_{(WAKE)}$ Test Circuit and Voltage Waveforms

TYPICAL CHARACTERISTICS

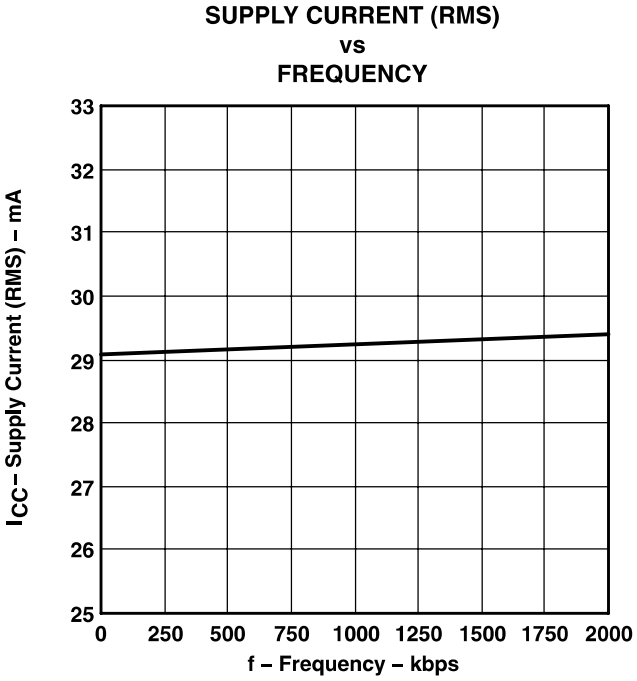

Figure 9

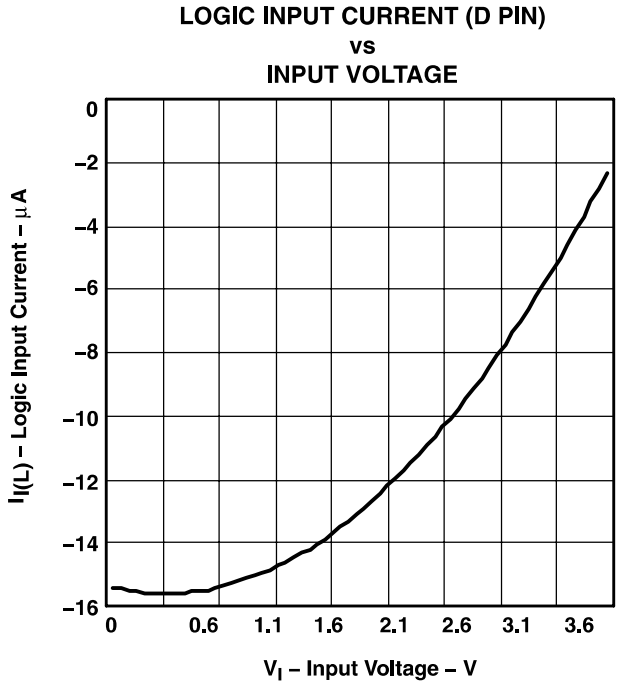

Figure 10

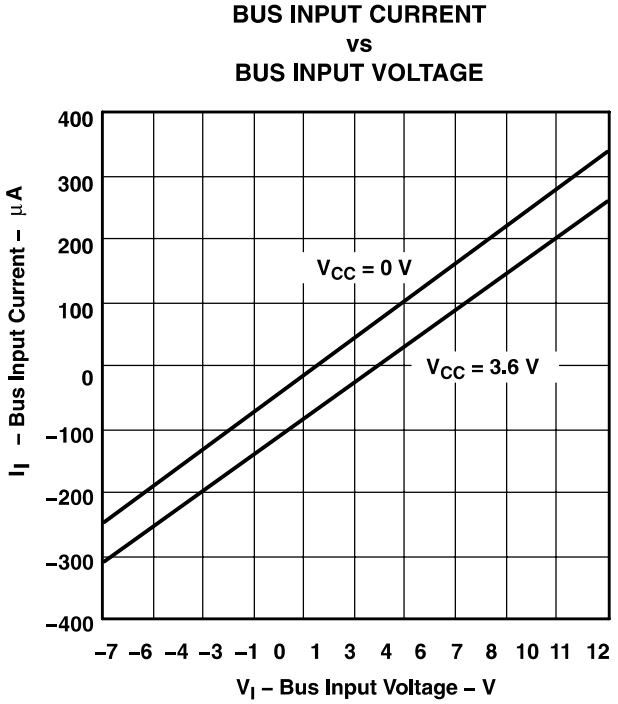

Figure 11

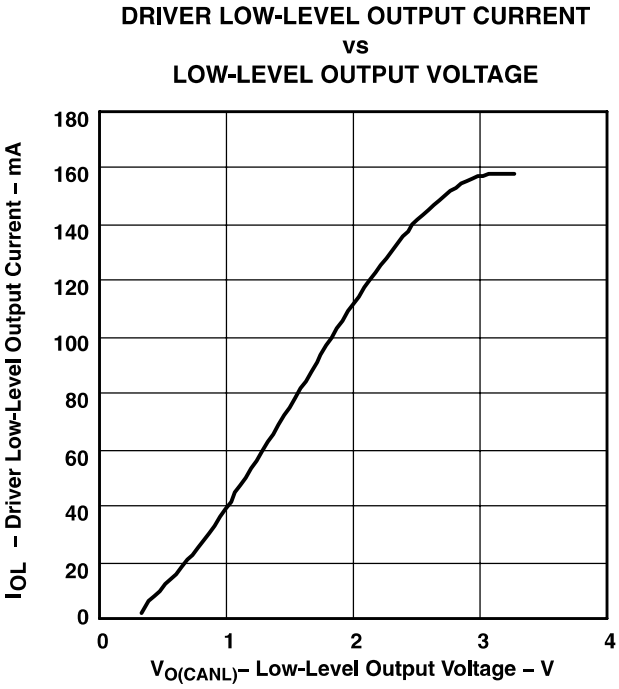

Figure 12

TYPICAL CHARACTERISTICS

DRIVER HIGH-LEVEL OUTPUT CURRENT vs HIGH-LEVEL OUTPUT VOLTAGE

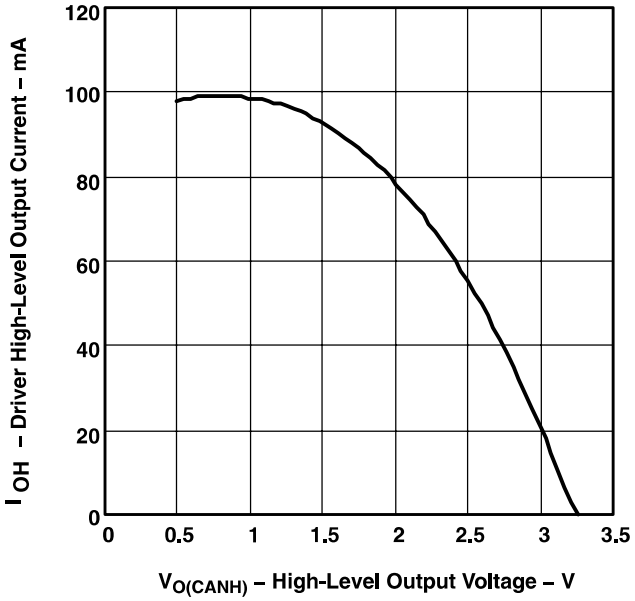

Figure 13

DOMINANT VOLTAGE (V_{OD}) vs FREE-AIR TEMPERATURE

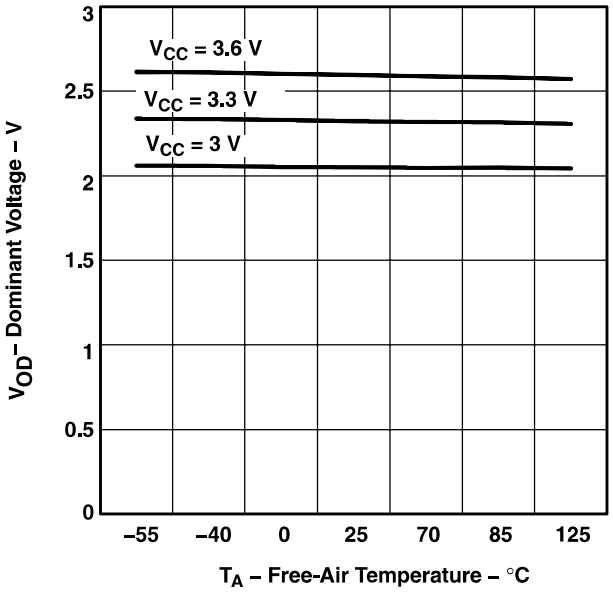

Figure 14

RECEIVER LOW-TO-HIGH PROPAGATION DELAY TIME vs FREE-AIR TEMPERATURE

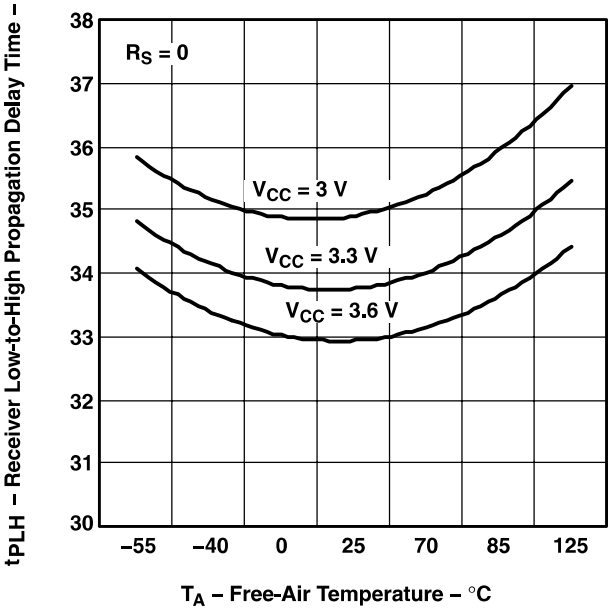

Figure 15

RECEIVER HIGH-TO-LOW PROPAGATION DELAY TIME vs FREE-AIR TEMPERATURE

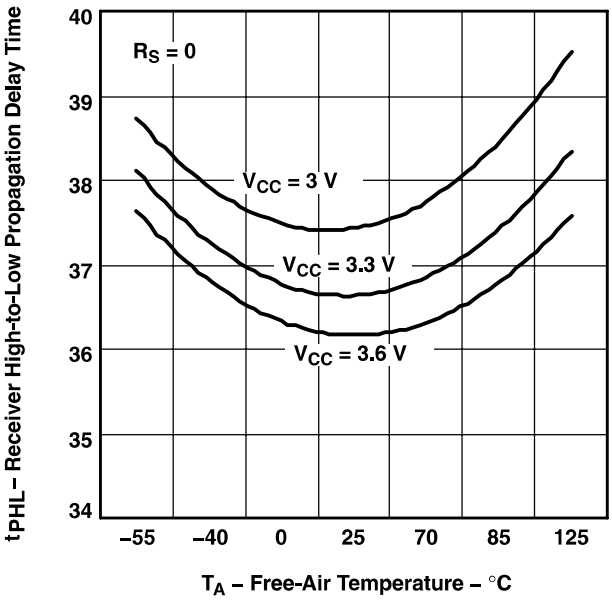

Figure 16

TYPICAL CHARACTERISTICS

DRIVER LOW-TO-HIGH PROPAGATION DELAY TIME vs FREE-AIR TEMPERATURE

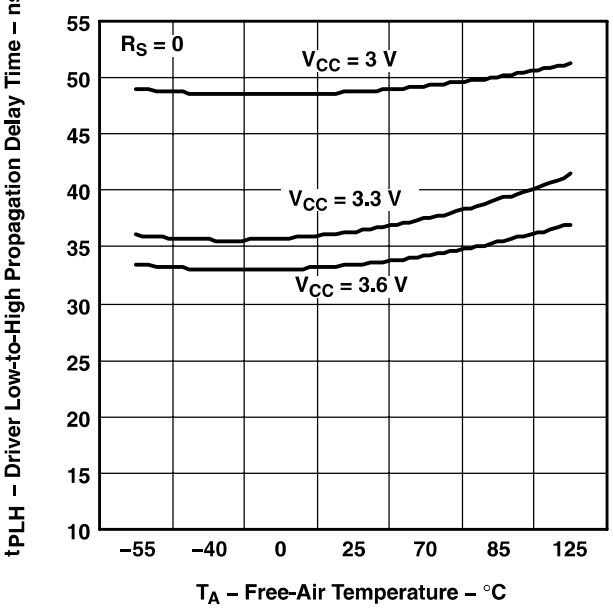

Figure 17

DRIVER HIGH-TO-LOW PROPAGATION DELAY TIME vs FREE-AIR TEMPERATURE

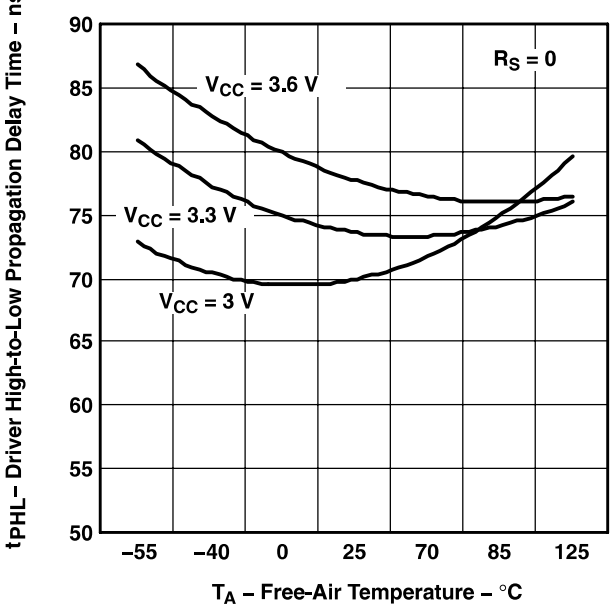

Figure 18

DRIVER LOW-TO-HIGH PROPAGATION DELAY TIME vs FREE-AIR TEMPERATURE

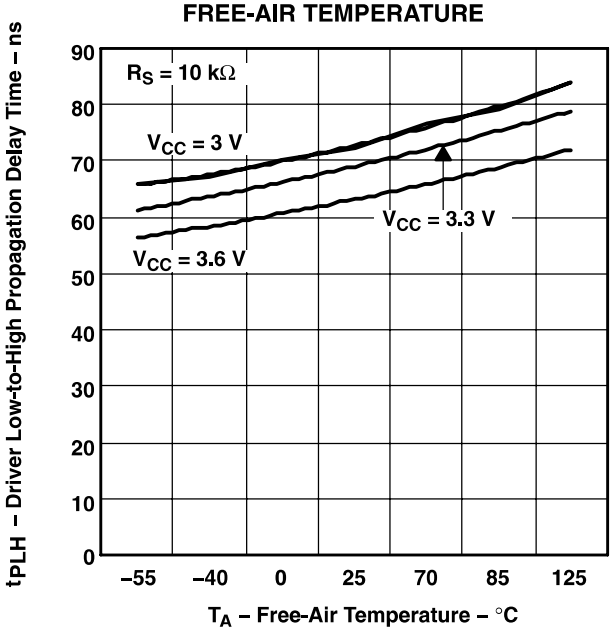

Figure 19

DRIVER HIGH-TO-LOW PROPAGATION DELAY TIME vs FREE-AIR TEMPERATURE

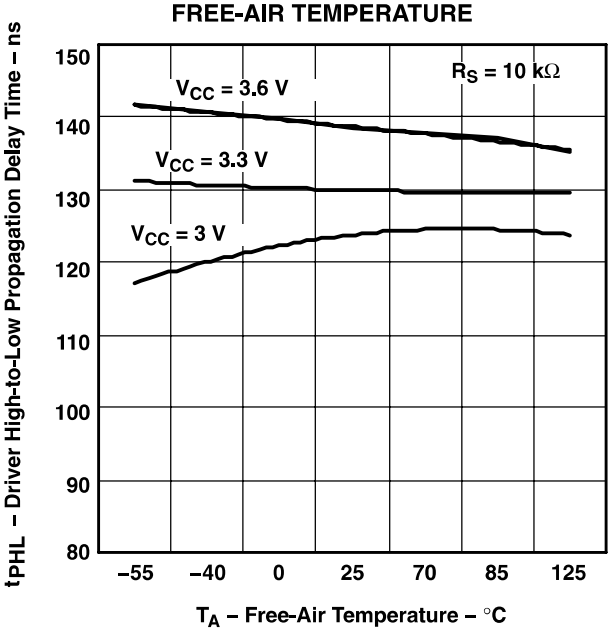

Figure 20

TYPICAL CHARACTERISTICS

DRIVER LOW-TO-HIGH PROPAGATION DELAY TIME vs FREE-AIR TEMPERATURE

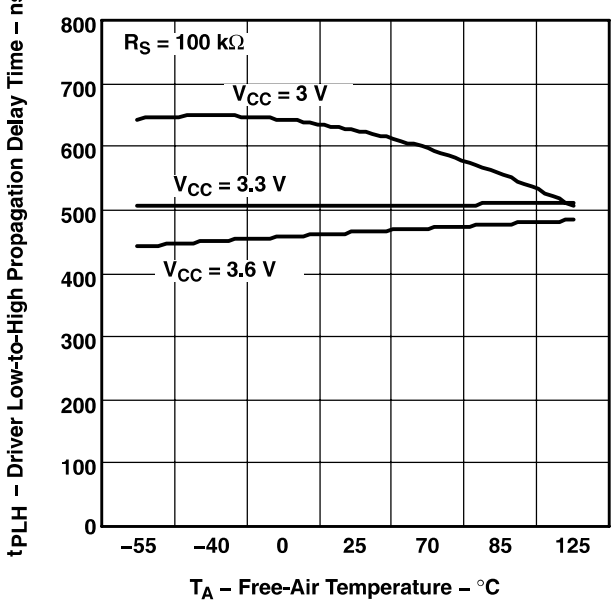

Figure 21

DRIVER HIGH-TO-LOW PROPAGATION DELAY TIME vs FREE-AIR TEMPERATURE

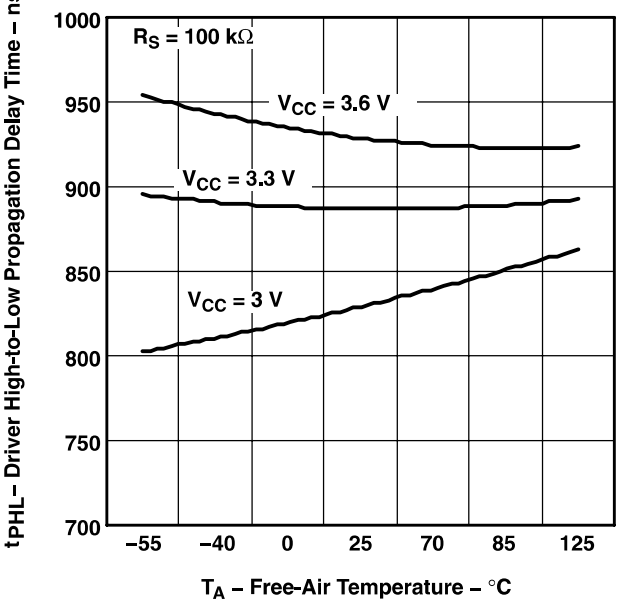

Figure 22

DRIVER OUTPUT CURRENT vs SUPPLY VOLTAGE

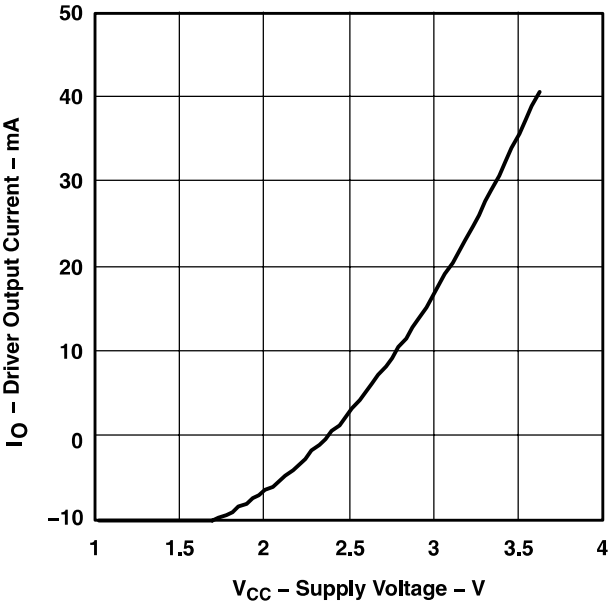

Figure 23

DIFFERENTIAL DRIVER OUTPUT FALL TIME vs Source Resistance (R_S)

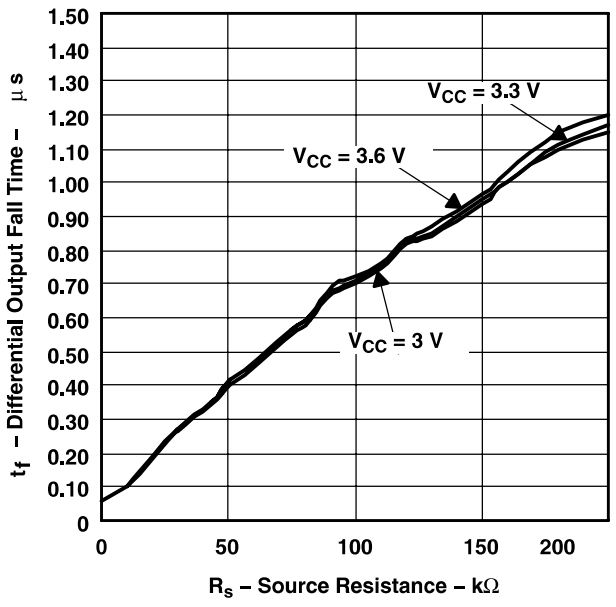

Figure 24

TYPICAL CHARACTERISTICS

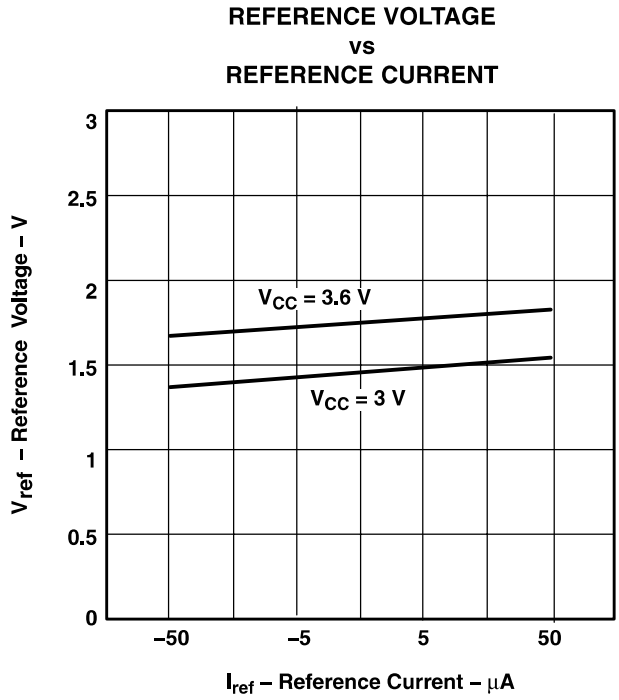

Figure 25

APPLICATION INFORMATION

This application provides information concerning the implementation of the physical medium attachment layer in a CAN network according to the ISO 11898 standard. It presents a typical application circuit and test results, as well as discussions on slope control, total loop delay, and interoperability in 5-V systems.

introduction

ISO 11898 is the international standard for high-speed serial communication using the controller area network (CAN) bus protocol. It supports multimaster operation, real-time control, programmable data rates up to 1 Mbps, and powerful redundant error checking procedures that provide reliable data transmission. It is suited for networking *intelligent* devices as well as sensors and actuators within the rugged electrical environment of a machine chassis or factory floor. The SN65HVD230Q family of 3.3-V CAN transceivers implement the lowest layers of the ISO/OSI reference model. This is the interface with the physical signaling output of the CAN controller of the Texas Instruments TMS320Lx240x 3.3-V DSPs, as illustrated in Figure 26.

APPLICATION INFORMATION

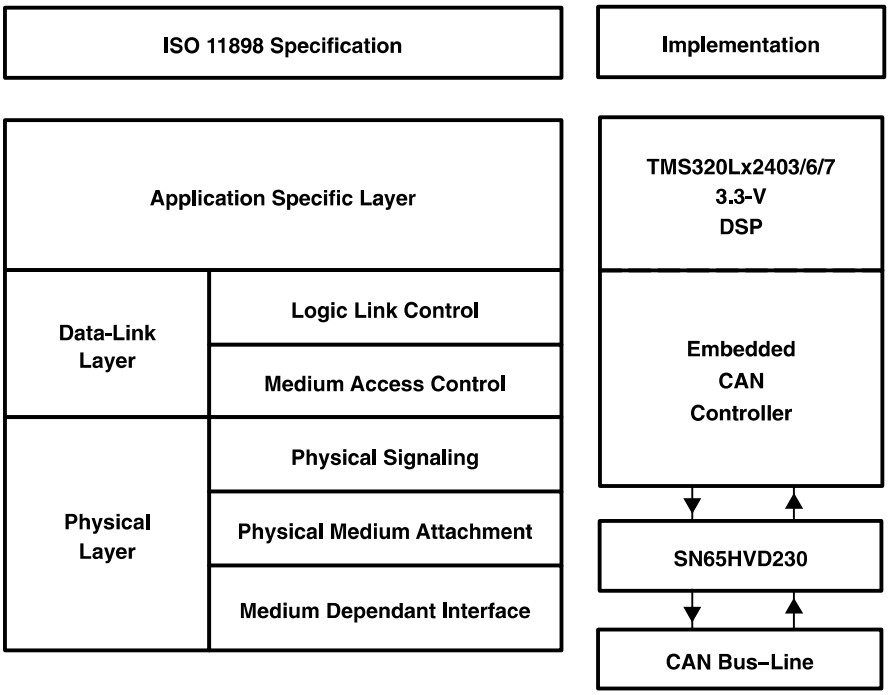

Figure 26. The Layered ISO 11898 Standard Architecture

The SN65HVD230Q family of CAN transceivers are compatible with the ISO 11898 standard; this ensures interoperability with other standard-compliant products.

application of the SN65HVD230Q

Figure 27 illustrates a typical application of the SN65HVD230Q family. The output of a DSP's CAN controller is connected to the serial driver input, pin D, and receiver serial output, pin R, of the transceiver. The transceiver is then attached to the differential bus lines at pins CANH and CANL. Typically, the bus is a twisted pair of wires with a characteristic impedance of 120 Ω, in the standard half-duplex multipoint topology of Figure 28. Each end of the bus is terminated with 120-Ω resistors in compliance with the standard to minimize signal reflections on the bus.

APPLICATION INFORMATION

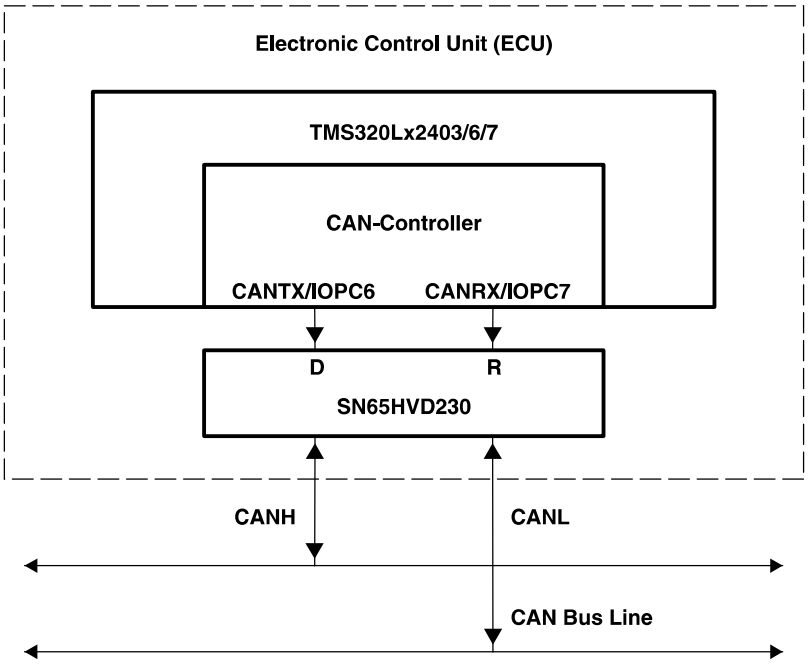

Figure 27. Details of a Typical CAN Node

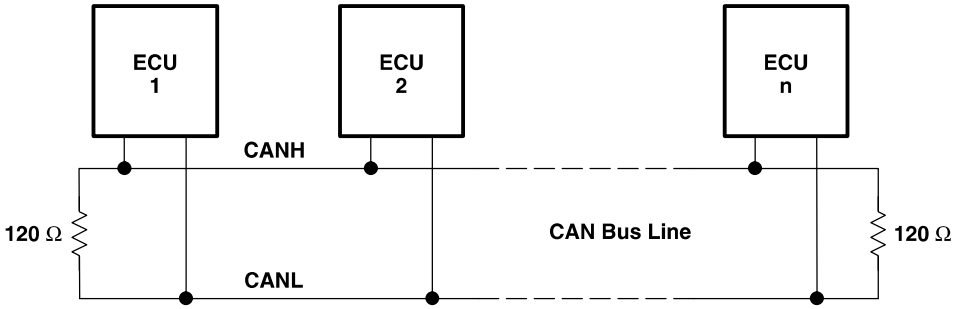

Figure 28. Typical CAN Network

The SN65HVD230Q/231Q/232Q 3.3-V CAN transceivers provide the interface between the 3.3-V TMS320Lx2403/6/7 CAN DSPs and the differential bus line, and are designed to transmit data at signaling rates up to 1 Mbps as defined by the ISO 11898 standard.

features of the SN65HVD230Q, SN65HVD231Q, and SN65HVD232Q

The SN65HVD230Q/231Q/232Q are pin-compatible (but not functionally identical) with one another and, depending upon the application, may be used with identical circuit boards.

These transceivers feature 3.3-V operation and standard compatibility with signaling rates up to 1 Mbps, and also offer 16-kV HBM ESD protection on the bus pins, thermal shutdown protection, bus fault protection, and open-circuit receiver failsafe. The failsafe design of the receiver assures a logic high at the receiver output if the bus wires become open circuited. If a high ambient operating environment temperature or excessive output current result in thermal shutdown, the bus pins become high impedance, while the D and R pins default to a logic high.

APPLICATION INFORMATION

features of the SN65HVD230Q, SN65HVD231Q, and SN65HVD232Q (continued)

The bus pins are also maintained in a high-impedance state during low V_{CC} conditions to ensure glitch-free power-up and power-down bus protection for hot-plugging applications. This high-impedance condition also means that an unpowered node will not disturb the bus. Transceivers without this feature usually have a very low output impedance. This results in a high current demand when the transceiver is unpowered, a condition that could affect the entire bus.

operating modes

R_S (pin 8) of the SN65HVD230Q and SN65HVD231Q provides for three different modes of operation: high-speed mode, slope-control mode, and low-power standby mode.

high-speed mode

The high-speed mode can be selected by applying a logic low to Rs (pin 8). The high-speed mode of operation is commonly employed in industrial applications. High-speed allows the output to switch as fast as possible with no internal limitation on the output rise and fall slopes. The only limitations of the high-speed operation are cable length and radiated emission concerns, each of which is addressed by the slope control mode of operation.

If the low-power standby mode is to be employed in the circuit, direct connection to a DSP output pin can be used to switch between a logic-low level (< 1 V) for high speed mode operation, and the logic-high level (> 0.75 V_{CC}) for standby mode operation. Figure 29 shows a typical DSP connection, and Figure 30 shows the SN65HVD230Q driver output signal in high-speed mode on the CAN bus.

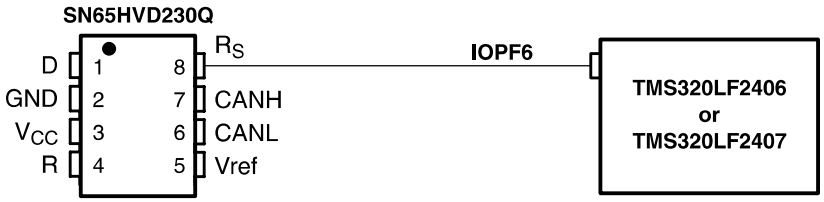

Figure 29. R_S (Pin 8) Connection to a TMS320LF2406/07 for High-Speed or Standby Mode Operation

APPLICATION INFORMATION

high-speed mode (continued)

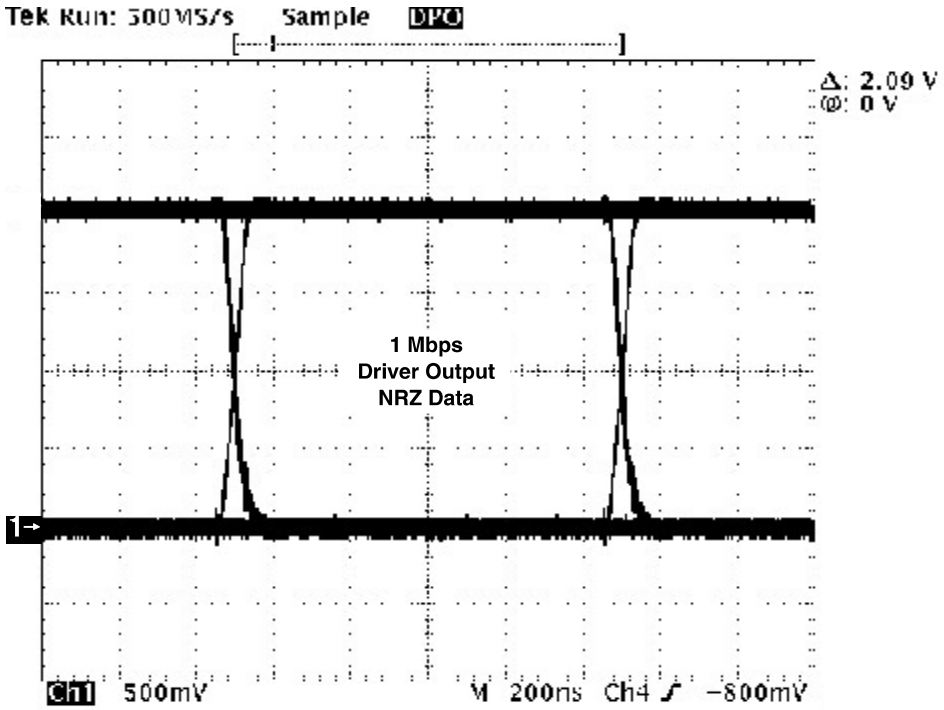

Figure 30. Typical SN65HVD230Q High-Speed Mode Output Waveform Into a 60-Ω Load

slope-control mode

Electromagnetic compatibility is essential in many applications using unshielded bus cable to reduce system cost. To reduce the electromagnetic interference generated by fast rise times and resulting harmonics, the rise and fall slopes of the SN65HVD230Q and SN65HVD231Q driver outputs can be adjusted by connecting a resistor from R_S (pin 8) to ground or to a logic low voltage, as shown in Figure 31. The slope of the driver output signal is proportional to the pin's output current. This slope control is implemented with an external resistor value of 10 kΩ to achieve a ≈ 15 V/µs slew rate, and up to 100 kΩ to achieve a ≈ 2.0 V/µs slew rate as displayed in Figure 32. Typical driver output waveforms from a pulse input signal with and without slope control are displayed in Figure 33. A pulse input is used rather than NRZ data to clearly display the actual slew rate.

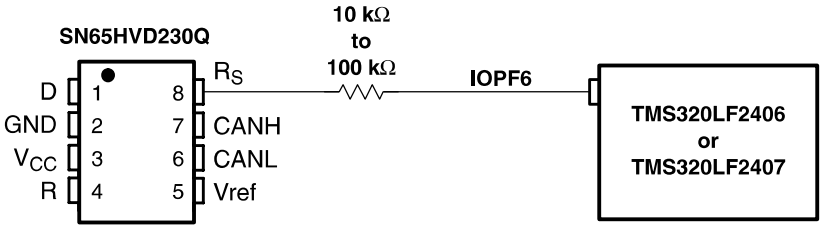

Figure 31. Slope-Control or Standby Mode Connection to a DSP

APPLICATION INFORMATION

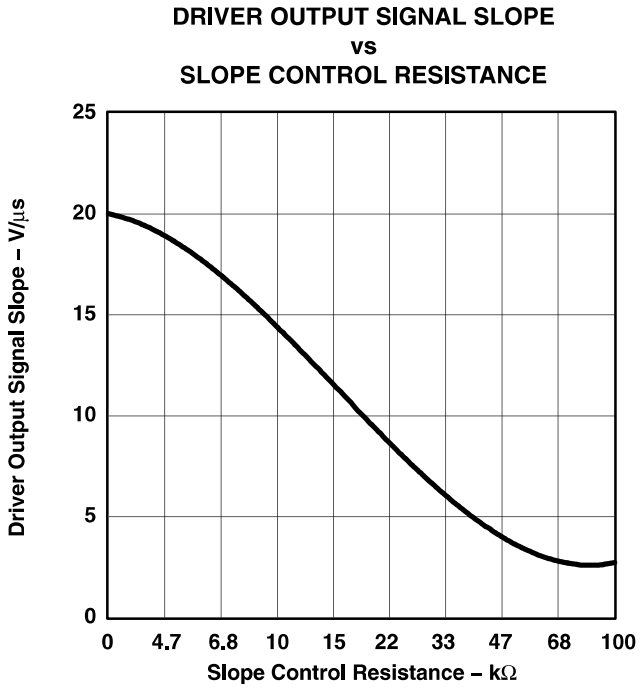

Figure 32. SN65HVD230Q Driver Output Signal Slope vs Slope Control Resistance Value

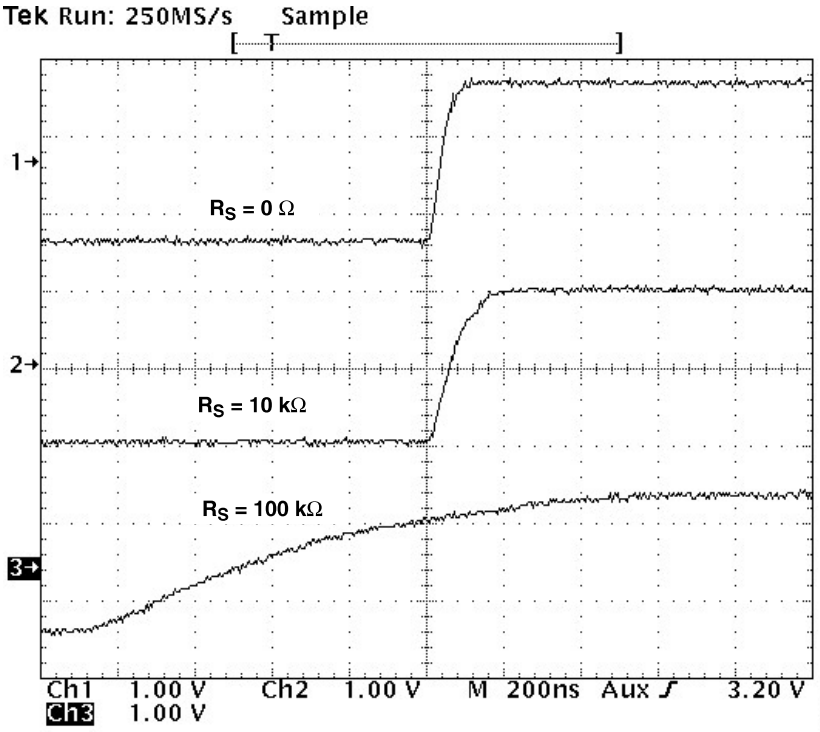

Figure 33. Typical SN65HVD230Q 250-kbps Output Pulse Waveforms With Slope Control

APPLICATION INFORMATION

standby mode (listen only mode) of the SN65HVD230Q

If a logic high (> 0.75 V_{CC}) is applied to R_S (pin 8) in Figures 29 and 31, the circuit of the SN65HVD230Q enters a low-current, *listen only* standby mode during which the driver is switched off and the receiver remains active. In this *listen only* state, the transceiver is completely passive to the bus. It makes no difference if a slope control resistor is in place as shown in Figure 31. The DSP can reverse this low-power standby mode when the rising edge of a dominant state (bus differential voltage > 900 mV typical) occurs on the bus. The DSP, sensing bus activity, reactivates the driver circuit by placing a logic low (< 1.2 V) on R_S (pin 8).

the babbling idiot protection of the SN65HVD231Q

Occasionally, a runaway CAN controller unintentionally sends messages that completely tie up the bus (what is referred to in CAN jargon as a babbling idiot). When this occurs, the DSP can engage the *listen-only* standby mode to disengage the driver and release the bus, even when access to the CAN controller has been lost. When the driver circuit is deactivated, its outputs default to a high-impedance state.

sleep mode of the SN65HVD231Q

The unique difference between the SN65HVD230Q and the SN65HVD231Q is that both driver and receiver are switched off in the SN65HVD231Q when a logic high is applied to R_S (pin 8). The device remains in a very low power-sleep mode until the circuit is reactivated with a logic low applied to R_S (pin 8). While in this sleep mode, the bus pins are in a high-impedance state, while the D and R pins default to a logic high.

loop propagation delay

Transceiver loop delay is a measure of the overall device propagation delay, consisting of the delay from the driver input to the differential outputs, plus the delay from the receiver inputs to its output.

The loop delay of the transceiver displayed in Figure 34 increases accordingly when slope control is being used. This increased loop delay means that the total bus length must be reduced to meet the CAN bit-timing requirements of the overall system. The loop delay becomes ≈100 ns when employing slope control with a 10-kΩ resistor, and ≈500 ns with a 100-kΩ resistor. Therefore, considering that the rule-of-thumb propagation delay of typical bus cable is 5 ns/m, slope control with the 100-kΩ resistor decreases the allowable bus length by the difference between the 500-ns max loop delay and the loop delay with no slope control, 70.7 ns. This equates to (500–70.7 ns)/5 ns, or approximately 86 m less bus length. This slew-rate/bus length trade-off to reduce electromagnetic interference to adjoining circuits from the bus can also be solved with a high-quality shielded bus cable.

APPLICATION INFORMATION

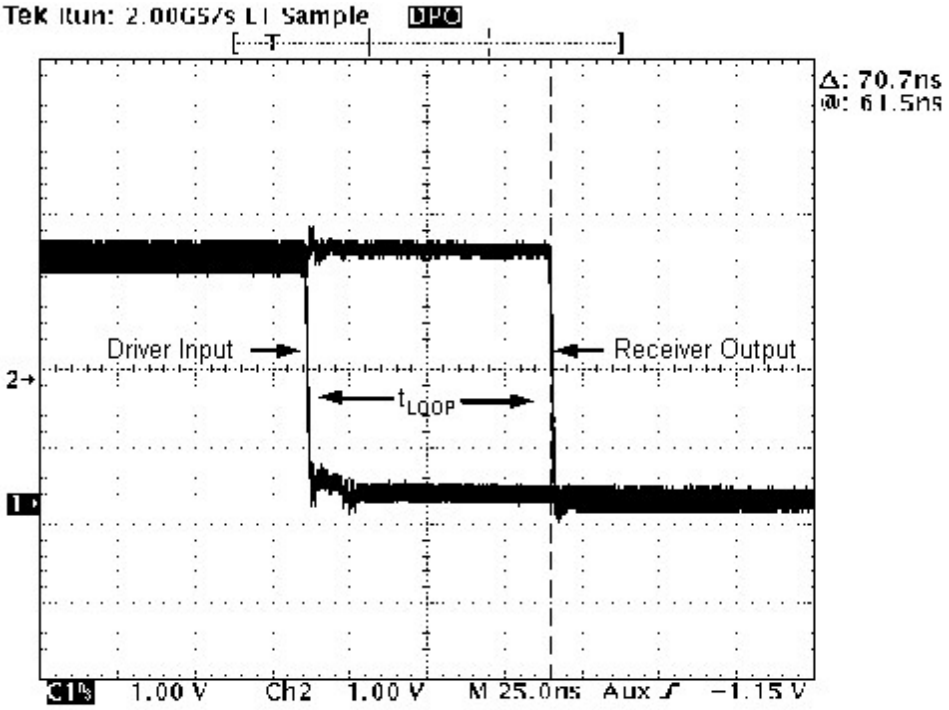

Figure 34. 70.7-ns Loop Delay Through the SN65HVD230Q With R_S = 0

APPLICATION INFORMATION

interoperability with 5-V CAN systems

It is essential that the 3.3-V SN65HVD230Q family performs seamlessly with 5-V transceivers because of the large number of 5-V devices installed. Figure 35 displays a test bus of a 3.3-V node with the SN65HVD230Q, and three 5-V nodes: one for each of TI's SN65LBC031 and UC5350 transceivers, and one using a competitor X250 transceiver.

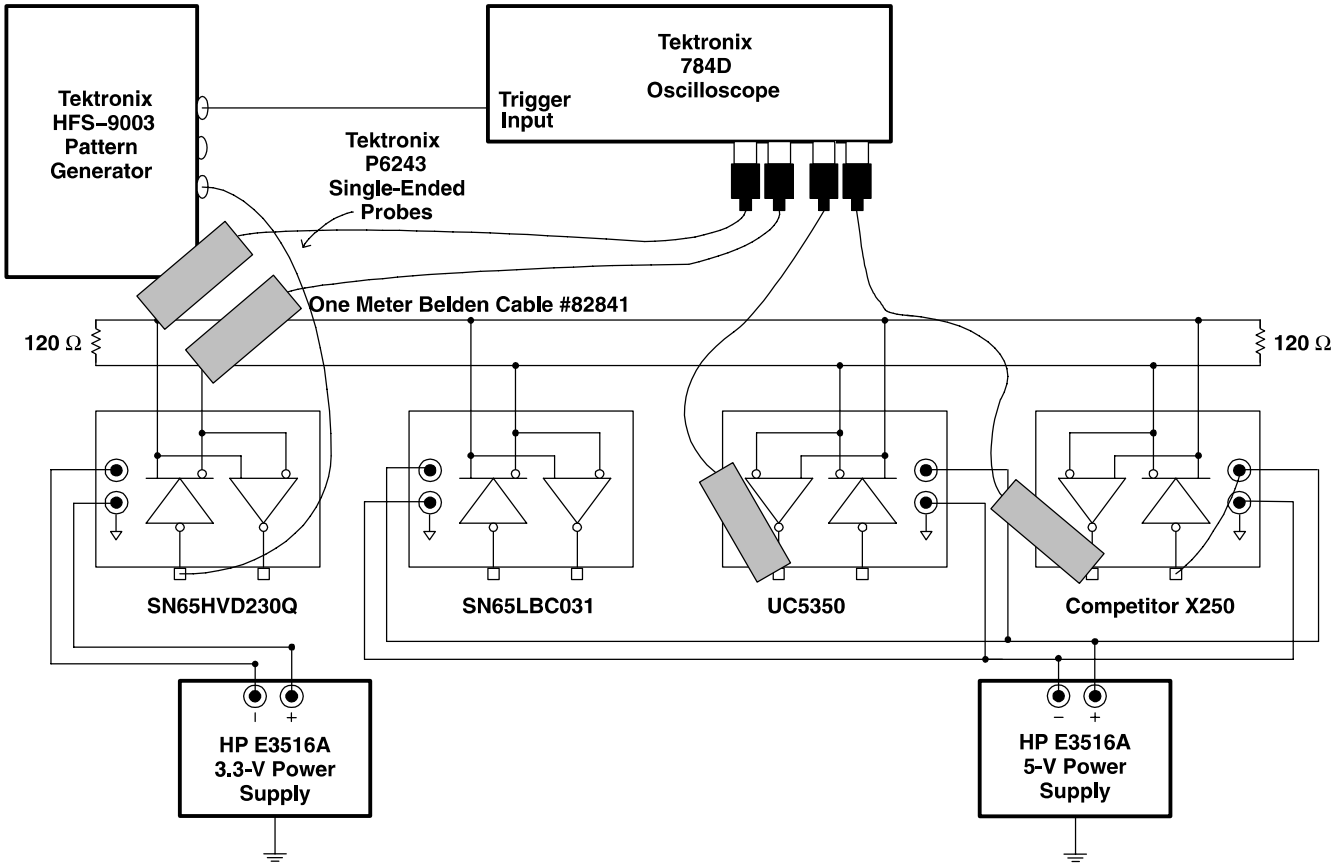

Figure 35. 3.3-V/5-V CAN Transceiver Test Bed

APPLICATION INFORMATION

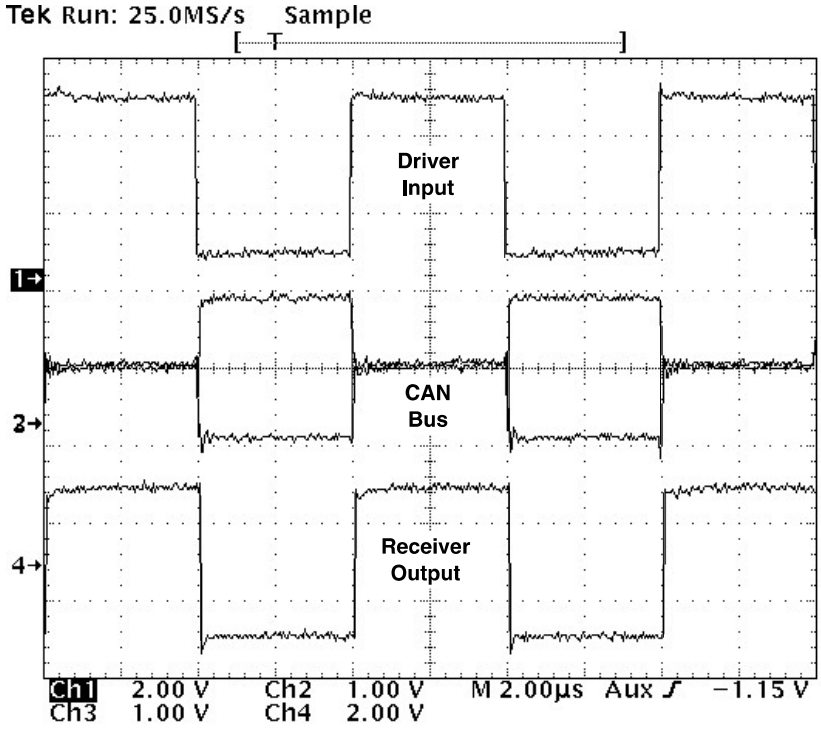

Figure 36. SN65HVD230Q's Input, CAN Bus, and X250's RXD Output Waveforms

Figure 36 displays the SN65HVD230Q's input signal, the CAN bus, and the competitor X250's receiver output waveforms. The input waveform from the Tektronix HFS-9003 Pattern Generator in Figure 35 to the SN65HVD230Q is a 250-kbps pulse for this test. The circuit is monitored with Tektronix P6243, 1-GHz single-ended probes in order to display the CAN dominant and recessive bus states.

Figure 36 displays the 250-kbps pulse input waveform to the SN65HVD230Q on channel 1. Channels 2 and 3 display CANH and CANL respectively, with their recessive bus states overlaying each other to clearly display the dominant and recessive CAN bus states. Channel 4 is the receiver output waveform of the competitor X250.

PACKAGING INFORMATION

Orderable part number	Status (1)	Material type (2)	Package | Pins	Package qty | Carrier	RoHS (3)	Lead finish/ Ball material (4)	MSL rating/ Peak reflow (5)	Op temp (°C)	Part marking (6)
SN65HVD230QD	Obsolete	Production	SOIC (D) | 8	-	-	Call TI	Call TI	-40 to 125	HV230Q
SN65HVD230QDG4Q1	Active	Production	SOIC (D) | 8	75 | TUBE	Yes	NIPDAU	Level-1-260C-UNLIM	-40 to 125	230Q1
SN65HVD230QDG4Q1.A	Active	Production	SOIC (D) | 8	75 | TUBE	Yes	NIPDAU	Level-1-260C-UNLIM	-40 to 125	230Q1
SN65HVD230QDR	Active	Production	SOIC (D) | 8	2500 | LARGE T&R	Yes	NIPDAU	Level-1-260C-UNLIM	-40 to 125	HV230Q
SN65HVD230QDR.A	Active	Production	SOIC (D) | 8	2500 | LARGE T&R	Yes	NIPDAU	Level-1-260C-UNLIM	-40 to 125	HV230Q
SN65HVD230QDRG4	Obsolete	Production	SOIC (D) | 8	-	-	Call TI	Call TI	-40 to 125	HV230Q
SN65HVD230QDRG4Q1	Active	Production	SOIC (D) | 8	2500 | LARGE T&R	Yes	NIPDAU	Level-1-260C-UNLIM	-40 to 125	230Q1
SN65HVD230QDRG4Q1.A	Active	Production	SOIC (D) | 8	2500 | LARGE T&R	Yes	NIPDAU	Level-1-260C-UNLIM	-40 to 125	230Q1
SN65HVD231QD	Active	Production	SOIC (D) | 8	75 | TUBE	Yes	NIPDAU	Level-1-260C-UNLIM	-40 to 125	HV231Q
SN65HVD231QD.A	Active	Production	SOIC (D) | 8	75 | TUBE	Yes	NIPDAU	Level-1-260C-UNLIM	-40 to 125	HV231Q
SN65HVD231QDG4	Active	Production	SOIC (D) | 8	75 | TUBE	Yes	NIPDAU	Level-1-260C-UNLIM	-40 to 125	HV231Q
SN65HVD231QDG4.A	Active	Production	SOIC (D) | 8	75 | TUBE	Yes	NIPDAU	Level-1-260C-UNLIM	-40 to 125	HV231Q
SN65HVD231QDR	Active	Production	SOIC (D) | 8	2500 | LARGE T&R	Yes	NIPDAU	Level-1-260C-UNLIM	-40 to 125	HV231Q
SN65HVD231QDR.A	Active	Production	SOIC (D) | 8	2500 | LARGE T&R	Yes	NIPDAU	Level-1-260C-UNLIM	-40 to 125	HV231Q
SN65HVD231QDRG4	Obsolete	Production	SOIC (D) | 8	-	-	Call TI	Call TI	-40 to 125	HV231Q
SN65HVD231QDRG4Q1	Active	Production	SOIC (D) | 8	2500 | LARGE T&R	Yes	NIPDAU	Level-1-260C-UNLIM	-40 to 125	231Q1
SN65HVD231QDRG4Q1.A	Active	Production	SOIC (D) | 8	2500 | LARGE T&R	Yes	NIPDAU	Level-1-260C-UNLIM	-40 to 125	231Q1
SN65HVD231QDRQ1	Active	Production	SOIC (D) | 8	2500 | LARGE T&R	Yes	NIPDAU	Level-1-260C-UNLIM	-40 to 125	231Q1
SN65HVD231QDRQ1.A	Active	Production	SOIC (D) | 8	2500 | LARGE T&R	Yes	NIPDAU	Level-1-260C-UNLIM	-40 to 125	231Q1
SN65HVD232QD	Active	Production	SOIC (D) | 8	75 | TUBE	Yes	NIPDAU	Level-1-260C-UNLIM	-40 to 125	HV232Q
SN65HVD232QD.A	Active	Production	SOIC (D) | 8	75 | TUBE	Yes	NIPDAU	Level-1-260C-UNLIM	-40 to 125	HV232Q
SN65HVD232QDG4	Active	Production	SOIC (D) | 8	75 | TUBE	Yes	NIPDAU	Level-1-260C-UNLIM	-40 to 125	HV232Q
SN65HVD232QDG4.A	Active	Production	SOIC (D) | 8	75 | TUBE	Yes	NIPDAU	Level-1-260C-UNLIM	-40 to 125	HV232Q
SN65HVD232QDR	Active	Production	SOIC (D) | 8	2500 | LARGE T&R	Yes	NIPDAU	Level-1-260C-UNLIM	-40 to 125	HV232Q
SN65HVD232QDR.A	Active	Production	SOIC (D) | 8	2500 | LARGE T&R	Yes	NIPDAU	Level-1-260C-UNLIM	-40 to 125	HV232Q
SN65HVD232QDRG4	Active	Production	SOIC (D) | 8	2500 | LARGE T&R	Yes	NIPDAU	Level-1-260C-UNLIM	-40 to 125	HV232Q
SN65HVD232QDRG4.A	Active	Production	SOIC (D) | 8	2500 | LARGE T&R	Yes	NIPDAU	Level-1-260C-UNLIM	-40 to 125	HV232Q
SN65HVD232QDRG4Q1	Active	Production	SOIC (D) | 8	2500 | LARGE T&R	Yes	NIPDAU	Level-1-260C-UNLIM	-40 to 125	232Q1
SN65HVD232QDRG4Q1.A	Active	Production	SOIC (D) | 8	2500 | LARGE T&R	Yes	NIPDAU	Level-1-260C-UNLIM	-40 to 125	232Q1

Orderable part number	Status (1)	Material type (2)	Package | Pins	Package qty | Carrier	RoHS (3)	Lead finish/ Ball material (4)	MSL rating/ Peak reflow (5)	Op temp (°C)	Part marking (6)
SN65HVD232QDRQ1	Active	Production	SOIC (D) | 8	2500 | LARGE T&R	Yes	NIPDAU	Level-1-260C-UNLIM	-40 to 125	232Q1
SN65HVD232QDRQ1.A	Active	Production	SOIC (D) | 8	2500 | LARGE T&R	Yes	NIPDAU	Level-1-260C-UNLIM	-40 to 125	232Q1

(1) **Status:** For more details on status, see our product life cycle.

(2) **Material type:** When designated, preproduction parts are prototypes/experimental devices, and are not yet approved or released for full production. Testing and final process, including without limitation quality assurance, reliability performance testing, and/or process qualification, may not yet be complete, and this item is subject to further changes or possible discontinuation. If available for ordering, purchases will be subject to an additional waiver at checkout, and are intended for early internal evaluation purposes only. These items are sold without warranties of any kind.

(3) **RoHS values:** Yes, No, RoHS Exempt. See the TI RoHS Statement for additional information and value definition.

(4) **Lead finish/Ball material:** Parts may have multiple material finish options. Finish options are separated by a vertical ruled line. Lead finish/Ball material values may wrap to two lines if the finish value exceeds the maximum column width.

(5) **MSL rating/Peak reflow:** The moisture sensitivity level ratings and peak solder (reflow) temperatures. In the event that a part has multiple moisture sensitivity ratings, only the lowest level per JEDEC standards is shown. Refer to the shipping label for the actual reflow temperature that will be used to mount the part to the printed circuit board.

(6) **Part marking:** There may be an additional marking, which relates to the logo, the lot trace code information, or the environmental category of the part.

Multiple part markings will be inside parentheses. Only one part marking contained in parentheses and separated by a "~" will appear on a part. If a line is indented then it is a continuation of the previous line and the two combined represent the entire part marking for that device.

Important Information and Disclaimer: The information provided on this page represents TI's knowledge and belief as of the date that it is provided. TI bases its knowledge and belief on information provided by third parties, and makes no representation or warranty as to the accuracy of such information. Efforts are underway to better integrate information from third parties. TI has taken and continues to take reasonable steps to provide representative and accurate information but may not have conducted destructive testing or chemical analysis on incoming materials and chemicals. TI and TI suppliers consider certain information to be proprietary, and thus CAS numbers and other limited information may not be available for release.

In no event shall TI's liability arising out of such information exceed the total purchase price of the TI part(s) at issue in this document sold by TI to Customer on an annual basis.

OTHER QUALIFIED VERSIONS OF SN65HVD230Q, SN65HVD230Q-Q1, SN65HVD231Q, SN65HVD231Q-Q1, SN65HVD232Q, SN65HVD232Q-Q1 :

- Catalog : SN65HVD230Q, SN65HVD231Q, SN65HVD232Q
- Automotive : SN65HVD230Q-Q1, SN65HVD231Q-Q1, SN65HVD232Q-Q1

NOTE: Qualified Version Definitions:

- Catalog - TI's standard catalog product
- Automotive - Q100 devices qualified for high-reliability automotive applications targeting zero defects

TAPE AND REEL INFORMATION

REEL DIMENSIONS

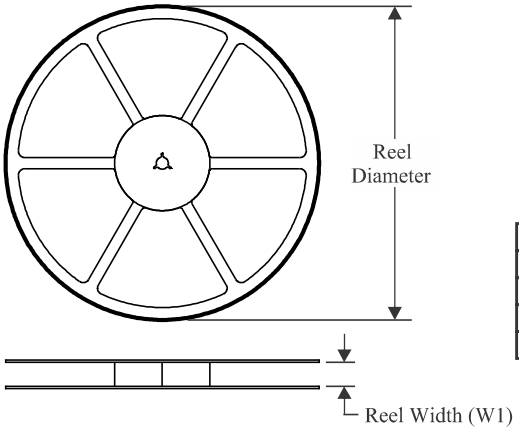

TAPE DIMENSIONS

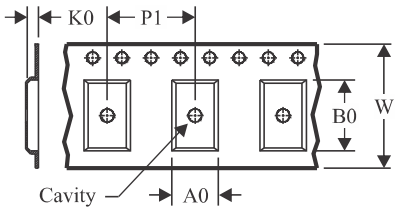

A0	Dimension designed to accommodate the component width
B0	Dimension designed to accommodate the component length
K0	Dimension designed to accommodate the component thickness
W	Overall width of the carrier tape
P1	Pitch between successive cavity centers

QUADRANT ASSIGNMENTS FOR PIN 1 ORIENTATION IN TAPE

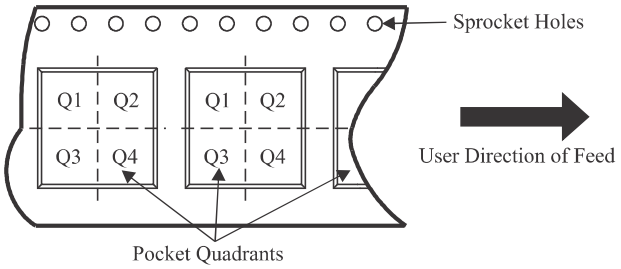

*All dimensions are nominal

Device	Package Type	Package Drawing	Pins	SPQ	Reel Diameter (mm)	Reel Width W1 (mm)	A0 (mm)	B0 (mm)	K0 (mm)	P1 (mm)	W (mm)	Pin1 Quadrant
SN65HVD230QDR	SOIC	D	8	2500	330.0	12.5	6.4	5.2	2.1	8.0	12.0	Q1
SN65HVD231QDR	SOIC	D	8	2500	330.0	12.5	6.4	5.2	2.1	8.0	12.0	Q1
SN65HVD232QDR	SOIC	D	8	2500	330.0	12.5	6.4	5.2	2.1	8.0	12.0	Q1

TAPE AND REEL BOX DIMENSIONS

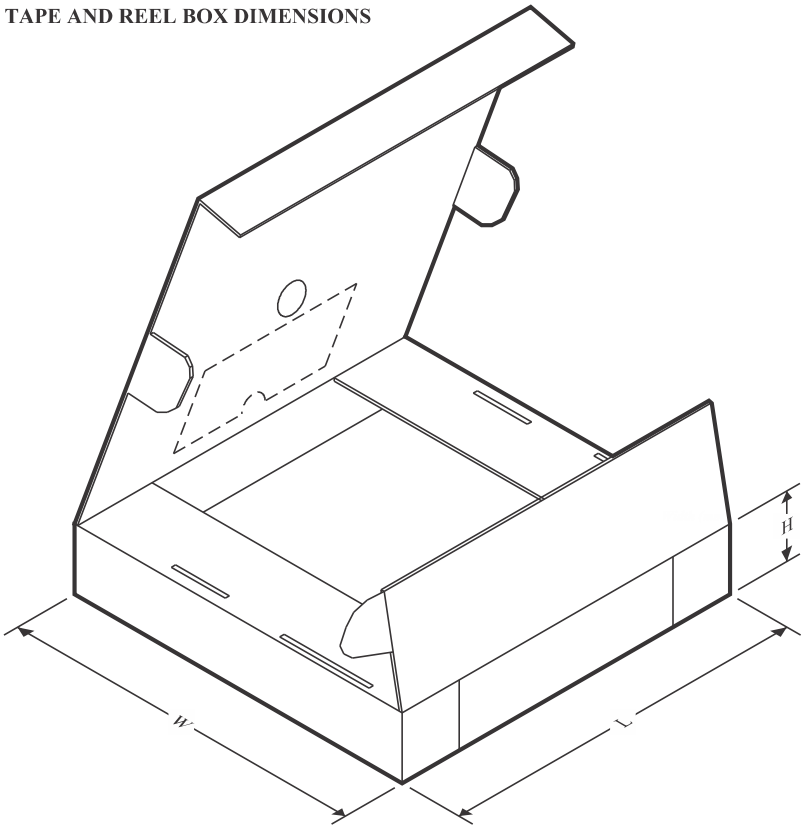

*All dimensions are nominal

Device	Package Type	Package Drawing	Pins	SPQ	Length (mm)	Width (mm)	Height (mm)
SN65HVD230QDR	SOIC	D	8	2500	353.0	353.0	32.0
SN65HVD231QDR	SOIC	D	8	2500	353.0	353.0	32.0
SN65HVD232QDR	SOIC	D	8	2500	353.0	353.0	32.0

TUBE

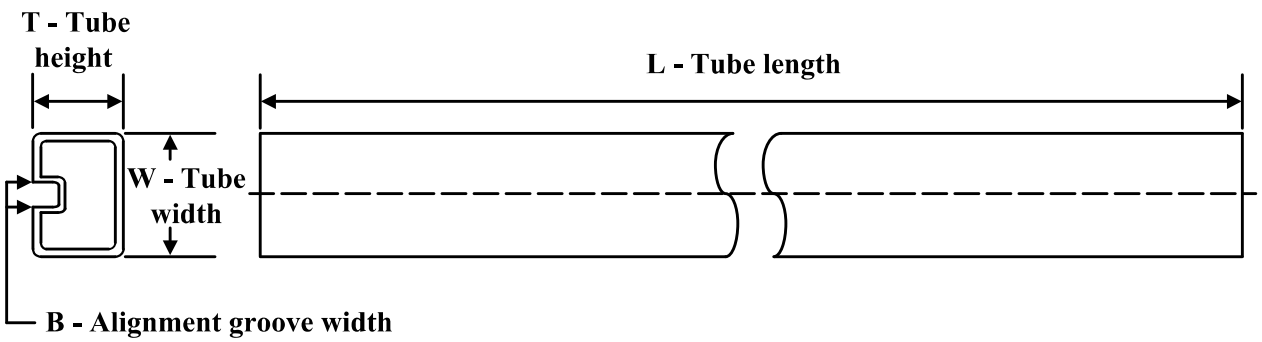

*All dimensions are nominal

Device	Package Name	Package Type	Pins	SPQ	L (mm)	W (mm)	T (µm)	B (mm)
SN65HVD230QDG4Q1	D	SOIC	8	75	507	8	3940	4.32
SN65HVD230QDG4Q1.A	D	SOIC	8	75	507	8	3940	4.32
SN65HVD231QD	D	SOIC	8	75	507	8	3940	4.32
SN65HVD231QD.A	D	SOIC	8	75	507	8	3940	4.32
SN65HVD231QDG4	D	SOIC	8	75	507	8	3940	4.32
SN65HVD231QDG4.A	D	SOIC	8	75	507	8	3940	4.32
SN65HVD232QD	D	SOIC	8	75	507	8	3940	4.32
SN65HVD232QD.A	D	SOIC	8	75	507	8	3940	4.32
SN65HVD232QDG4	D	SOIC	8	75	507	8	3940	4.32
SN65HVD232QDG4.A	D	SOIC	8	75	507	8	3940	4.32

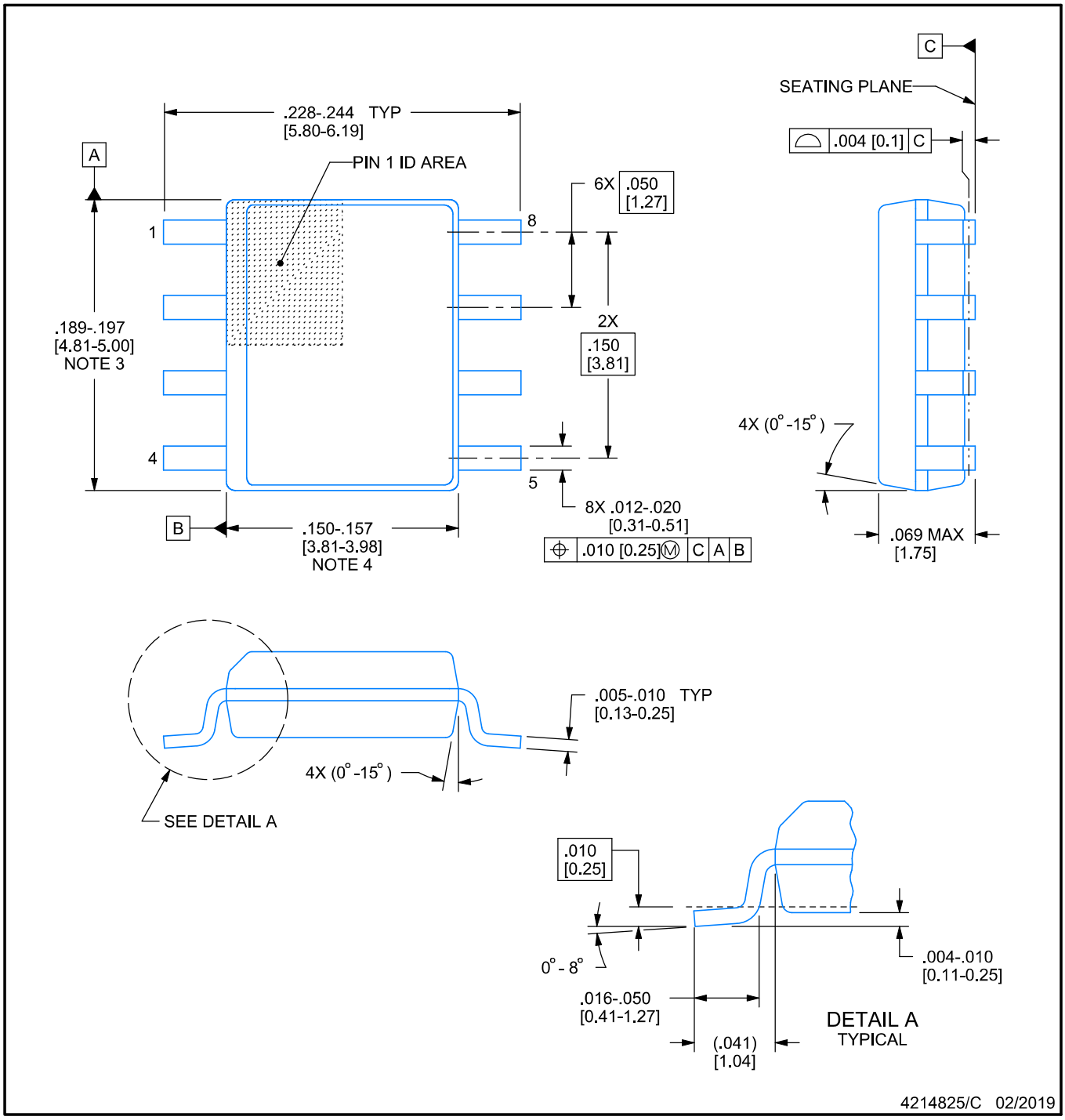

NOTES:

1. Linear dimensions are in inches [millimeters]. Dimensions in parenthesis are for reference only. Controlling dimensions are in inches. Dimensioning and tolerancing per ASME Y14.5M.
2. This drawing is subject to change without notice.
3. This dimension does not include mold flash, protrusions, or gate burrs. Mold flash, protrusions, or gate burrs shall not exceed .006 [0.15] per side.
4. This dimension does not include interlead flash.
5. Reference JEDEC registration MS-012, variation AA.

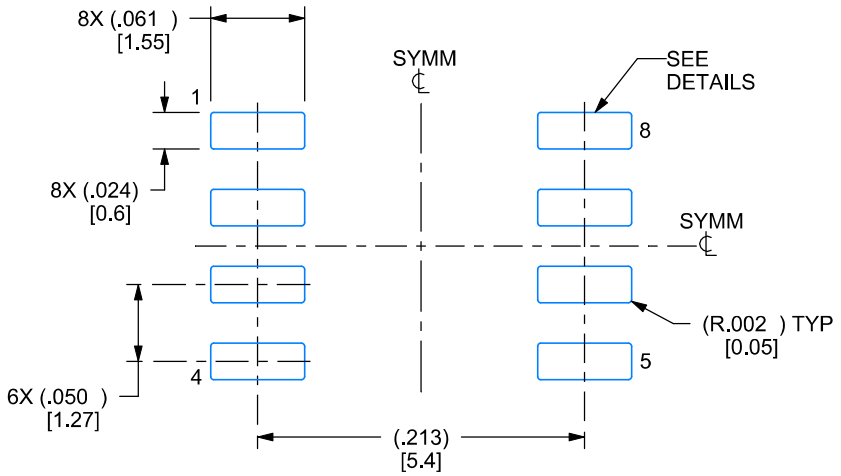

LAND PATTERN EXAMPLE
EXPOSED METAL SHOWN
SCALE:8X

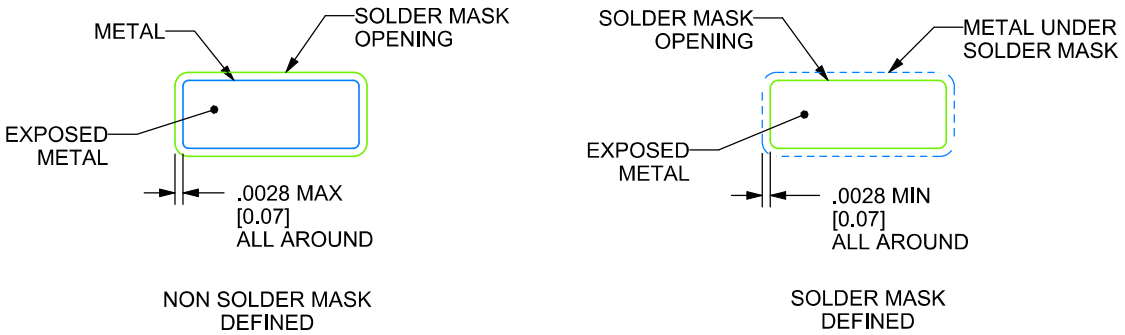

SOLDER MASK DETAILS

4214825/C 02/2019

NOTES: (continued)

6. Publication IPC-7351 may have alternate designs.
7. Solder mask tolerances between and around signal pads can vary based on board fabrication site.

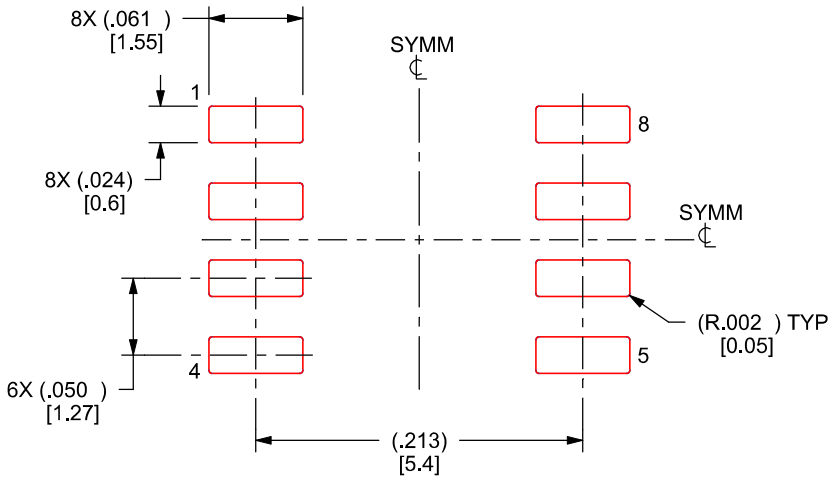

SOLDER PASTE EXAMPLE
BASED ON .005 INCH [0.125 MM] THICK STENCIL
SCALE:8X

4214825/C 02/2019

NOTES: (continued)

8. Laser cutting apertures with trapezoidal walls and rounded corners may offer better paste release. IPC-7525 may have alternate design recommendations.
9. Board assembly site may have different recommendations for stencil design.

IMPORTANT NOTICE AND DISCLAIMER

TI PROVIDES TECHNICAL AND RELIABILITY DATA (INCLUDING DATA SHEETS), DESIGN RESOURCES (INCLUDING REFERENCE DESIGNS), APPLICATION OR OTHER DESIGN ADVICE, WEB TOOLS, SAFETY INFORMATION, AND OTHER RESOURCES “AS IS” AND WITH ALL FAULTS, AND DISCLAIMS ALL WARRANTIES, EXPRESS AND IMPLIED, INCLUDING WITHOUT LIMITATION ANY IMPLIED WARRANTIES OF MERCHANTABILITY, FITNESS FOR A PARTICULAR PURPOSE OR NON-INFRINGEMENT OF THIRD PARTY INTELLECTUAL PROPERTY RIGHTS.

These resources are intended for skilled developers designing with TI products. You are solely responsible for (1) selecting the appropriate TI products for your application, (2) designing, validating and testing your application, and (3) ensuring your application meets applicable standards, and any other safety, security, regulatory or other requirements.

These resources are subject to change without notice. TI grants you permission to use these resources only for development of an application that uses the TI products described in the resource. Other reproduction and display of these resources is prohibited. No license is granted to any other TI intellectual property right or to any third party intellectual property right. TI disclaims responsibility for, and you will fully indemnify TI and its representatives against, any claims, damages, costs, losses, and liabilities arising out of your use of these resources.

TI’s products are provided subject to TI’s Terms of Sale or other applicable terms available either on ti.com or provided in conjunction with such TI products. TI’s provision of these resources does not expand or otherwise alter TI’s applicable warranties or warranty disclaimers for TI products.

TI objects to and rejects any additional or different terms you may have proposed.

Mailing Address: Texas Instruments, Post Office Box 655303, Dallas, Texas 75265
Copyright © 2025, Texas Instruments Incorporated